ANL-93/18

7-GeV Advanced Photon Source Beamline Initiative

Conceptual Design Report

Argonne National Laboratory, Argonne, Illinois 60439
operated by The University of Chicago for the U.S. Department of Energy under Contract W-31-109-Eng-38

Argonne National Laboratory, with facilities in the states of Illinois and Idaho, is owned by the United States government, and operated by The University of Chicago under the provisions of a contract with the Department of Energy.

Reproduced from the best available copy.

Available to DOE and DOE contractors from the
Office of Scientific and Technical Information
P.O. Box 62
Oak Ridge, TN 37831
Prices available from (615) 576-8401

Available to the public from the
National Technical Information Service
U.S. Department of Commerce
5285 Port Royal Road
Springfield, VA 22161

Distribution Category: Atomic,
Molecular, and Chemical Physics
(UC-411)

ARGONNE NATIONAL LABORATORY
9700 South Cass Avenue
Argonne, Illinois 60439

ANL-93/18

7-GeV Advanced Photon Source Beamline Initiative. Conceptual Design Report

May 1993

work sponsored by
U.S. DEPARTMENT OF ENERGY
Office of Energy Research

TABLE OF CONTENTS

TABLE OF CONTENTS continued

LIST OF FIGURES

LIST OF FIGURES continued

LIST OF TABLES

7-GeV Advanced Photon Source
APS Beamline Initiative
Conceptual Design Report

Abstract

The DOE is building a new generation 6-7 GeV Synchrotron Radiation Source known as the Advanced Photon Source (APS) at Argonne National Laboratory (Project No. 89-R-402). This facility, to be completed in FY 1996, can provide 70 x-ray sources of unprecedented brightness to meet the research needs of virtually all scientific disciplines and numerous technologies. The technological research capability of the APS in the areas of energy, communications and health will enable a new partnership between the DOE and U.S. industry. Current funding for the APS will complete the current phase of construction so that scientists can begin their applications in FY 1996. Comprehensive utilization of the unique properties of APS beams will enable cutting-edge research not currently possible. It is now appropriate to plan to construct additional radiation sources and beamline standard components to meet the excess demands of the APS users. The additional facilities provided by the beamline initiative will lead to additional beamlines, which will be built by Collaborative Access Teams.

In this APS Beamline Initiative, 2.5-m-long insertion-device x-ray sources will be built on four straight sections of the APS storage ring, and an additional four bending-magnet sources will also be put in use. The front ends for these eight x-ray sources will be built to contain and safeguard access to these bright x-ray beams. In addition, funds will be provided to build standard beamline components to meet scientific and technological research demands of the Collaborative Access Teams. This new initiative will also include four user laboratory modules designed to meet the x-ray research needs of the users.

The Conceptual Design Report (CDR) for the APS Beamline Intiative describes the scope of all the above technical and conventional construction and provides a detailed cost and schedule for these activities. According to these plans, this new initiative begins in FY 1995 and ends in FY 1998.

The document also describes the preconstruction R&D plans for the Beamline Intiative activities and provides the cost estimates for the required R&D.

CHAPTER I BACKGROUND AND OVERVIEW

1. INTRODUCTION

1.1 Background

The 6-7 GeV Synchrotron Radiation Source for the Advanced Photon Source (APS) is now under construction at Argonne National Laboratory (Project No. 89-R-402). This is a synchrotron radiation facility with the unique capability to produce highly brilliant x-ray beams.[1] User groups are now forming to make use of the x-rays from the APS in a variety of research endeavors, from basic science to industrial technology. These groups cover a very wide range of disciplines from condensed matter physics and materials sciences to chemistry and biology, from energy research to pharmaceutical research, from medical research to health sciences research, and from earth sciences to environmental sciences.

The APS facility was planned based on the recommendations by the Eisenberger-Knotek Committee.[2] These recommendations were later studied and endorsed by the Major Materials Facilities Committee of the National Academy of Sciences, chaired by Fredric Seitz and Dean Eastman.[3] The highest priority need for this facility was strongly endorsed by the National Research Council (Brinkman) Committee[4] and by two subcommittees of the DOE Energy Research Advisory Board.[5,6]

Recently, the SEAB Task Force on Energy Research[7] appointed by the Energy Secretary reiterated the above through the following statement: "The Task Force supports the continuation, on the current baseline of cost and schedule, of the Advanced Photon Source (APS) [current phase]. The APS was the highest priority of the 1984 National Academy of Sciences study on major materials facilities, and the Task Force believes that the construction of this third-generation synchrotron facility remains a very high scientific priority for the Department." The DOE's commitment to the construction of the APS is very evident from the funding of its construction, which began in FY 1989.

The current construction phase of the APS will be completed in FY 1997 when the user research programs will begin. However in the current phase of this project, only 32 of the 69 possible x-ray sources will be ready for use. Within the scope of current phase construction, insertion devices and beamline front ends will be built and installed by the APS so that the users can build 32 beamlines on the experiment floor to perform research. The 32 x-ray sources to be completed in the current phase have already been committed to their full use through this century by the scientific and technological users. There are many more users, who could not participate in the current phase, already committing to use the x-ray sources proposed in this Beamline Initiative when they become available. Hence, it is necessary to plan this new initiative to construct the necessary equipment to make the additional x-ray sources functional for user programs. The effective use of the APS will be optimal only when the new construction proposed in this Conceptual Design Report is completed.

In light of the above facts, it is timely to present the APS Beamline Initiative, which proposes the construction to begin in FY 1995 and be completed in FY 1998. The *7-GeV Advanced Photon Source Beamline Initiative Conceptual Design Report (CDR)* presents various elements of this construction project, including the costs and schedules.

1.2 Scope of the APS Beamline Initiative

In the APS Beamline Initiative, 2.5-m-long insertion device x-ray sources, which have been requested by the user groups in their beamline conceptual designs, will be built on an additional four straight sections of the APS Storage Ring. Also, an additional four bending magnet sources will be put to use. The front ends for these eight x-ray sources will be built to contain and safeguard access to these bright x-ray beams.

In addition, the Initiative includes funds for the construction and installation of standard components of the beamline that have personnel and equipment safety implications to the user groups

The APS Beamline Initiative also proposes to build four laboratory-office modules for the users. These modules are similar to the four included in the current construction project. They contain the first-floor area composed of office space, chemistry labs, electronics labs, toilet facilities, truck-dock air lock, compressed-gas storage, reception area, and work-break area.

2. PURPOSE AND JUSTIFICATION

2.1 Introduction

Purpose, Justification of Need for, and Scope of Project

The Advanced Photon Source is in great demand by scientific and technological researchers from the fields of physics, materials, chemistry, biology, energy, pharmaceuticals, and medicine. The new Beamline Initiative has two main goals: first, to provide standard beamline components to the technological and academic users forming Collaborative Access Teams; second, to support the unexpected demand for bright x-ray beams by the user community that could not be met in the funded phase of the project.

The APS Beamline Initiative reflects the need for the ultra-bright x-ray beams by industrial and academic users. Applications continue to increase, and they span a wide variety of scientific disciplines, for example, from studies of biological cells to structure of drugs to non-evasive diagnostics of the human heart, from physical sciences to environmental sciences. In order to effectively exploit this national scientific resource, the complement of instrumentation and laboratory space proposed here to support users must be provided.

The importance of this facility for industrial competitiveness of the U.S. is clear. The European countries have jointly built a facility in Grenoble, France, which is similar to the 6-7 GeV Synchrotron Radiation Source being built at Argonne. The Japanese are building a facility in Nishi-Harima that is larger than the APS Project even after the new Beamline Initiative is completed.

The demand for the APS Beamline Initiative reflects unusual research needs for the ultra-bright x-ray beams by industrial and academic users. The applications continue to increase in number with the opening of many unanticipated directions in research, and, as a result, the number of users from different disciplines will increase in the future years.

3. REFERENCES

1 G. K. Shenoy, P. J. Viccaro, and D. M. Mills, Characteristics of the 7 GeV Advanced Photon Source: A Guide for Users, Argonne National Laboratory Report, ANL-88-9 (1988).

2 Planning Study for Advanced National Synchrotron-Radiation Facilities, P. Eisenberger and M. L. Knotek, Chairmen, Sandia Laboratory Report (March 1984).

3 Major Facilities for Material Research and Related Disciplines, F. Seitz and D. Eastman, Chairmen, National Academy of Sciences, Washington, DC (1984).

4 Physics Throughout the 1990's: An Overview, W. Brinkman, Chairman, NRC Report, National Academy of Sciences, Washington, DC (1986).

5 Review of the National Research Council Report on Major Facilities for Materials Research, F. Stehli, Chairman, Energy Research Advisory Board Subcommittee, DOE (1987).

6 Review of the National Research Council Report on Physics Through the 1990's, B. Ancker-Johnson, Chairperson, Energy Research Advisory Subcommittee, DOE (1987).

7 Report from the Secretary of Energy Advisory Board (SEAB) Task Force on ER Priorities, Charles Towns, Chairman, Washington, DC (1991).

CHAPTER II USER ACCESS AND DEMAND FOR THE ADVANCED PHOTON SOURCE

The forefront capabilities of the APS will be available to qualified users affiliated with universities, industrial firms, national laboratories, and other institutions. Users may carry out nonproprietary, proprietary, or classified research projects at the APS. Users may participate in research at the APS either as members of Collaborative Access Teams or as Independent Investigators.

1. COLLABORATIVE ACCESS TEAMS

Researchers interested in long-term, intensive use of the APS will participate as members of Collaborative Access Teams (CATs). A CAT is an organizational entity that enters into an agreement with the APS, in the form of a Memorandum of Understanding, to develop and operate one or more of the 34 available APS sectors. Each sector consists of an insertion-device (ID) beamline and an adjacent bending magnet beamline. CATs are selected by means of a proposal process, which is described in Section 6 of this chapter (*The User Selection Process*). Each CAT will use its own funds to develop its sector(s), that is, to design, construct, and install the scientific equipment and optics required for their research on the beamlines that will be located outside the concrete shielding tunnel. The APS will design, construct and install some of the standard components of the beamline that have direct impact on the personnel and equipment safety. A group may request multiple sectors, with the understanding that it will develop them simultaneously. The APS assists in forming associations among groups requiring less than one sector to create larger groups whose combined needs justify the use of a whole sector.

CATs can be organized along disciplinary or institutional lines, or as multi-institutional consortia. Typical sponsors for CATs include academic institutions, national laboratories, industrial firms and consortia, governmental bodies, synchrotron service companies, or combinations of the above categories. In addition, a CAT can be established to operate one or more sectors as a national user facility in support of a specific discipline.

Each CAT will appoint a director, who will assume line responsibility for managing beamline development, operation, and safety. The APS will approve the CAT safety plans and will retain the ultimate responsibility for safety.

2. SECTOR ALLOCATION AND DEMAND

The first step in the sector allocation process is the consideration of proposals submitted to the APS by prospective CATs. The elements of a CAT proposal and the process by which it is submitted and reviewed are described in Section 6 of this chapter (*The User Selection Process).* In Table 2.1, the status (as of May 1993) of the Collaborative Access Teams (CATs) formed by the APS users is given. The number of CATs approved by the APS Proposal Evaluation Board (PEB) is 15, and several more CATs have received provisional approval. These 15 CATs are in need of 19 APS sectors to build 38 beamlines. On the other hand, the APS will develop only 16 sectors where users group can build 32 beamlines. At this time, the additional requests for 6 beamlines by the APS user groups can only be accommodated in the new APS Beamline Initiative presented in this document. Experience indicates that this demand will only grow during the coming years. Collectively, the approved CATs encompass more than 500 principal investigators from about 72 universities, 28 industrial firms, 18 national or private research laboratories, and 8 medical schools.

Appendix 1 gives information about the research focus and institutional makeup of the 15 approved CATs.

Each CAT with an approved proposal submits a Conceptual Design Report (CDR) to the APS for review by an independent Instrumentation Feasibility Panel. The CDR describes in detail the beamline components (outside of the concrete shielding tunnel) needed to carry out the research mission of the CAT. These components, which the CAT will furnish, include the first optics, beamline optics, and experimental equipment. Information provided in the CDR relative to these components includes spectral requirements, conceptual optical and mechanical designs, and R&D requirements.

Once a CAT has both an approved CDR and an approved plan for sector management, as well as written statements of funding intent from the organizations it has identified as its sources of financial support, the CAT and the APS will sign a Memorandum of Understanding (MOU). The MOU specifies the number of sectors allocated to the CAT and the length of its initial period of tenure. A separate document, *APS User Policies and Procedures,* will give details of the working relationship between the CATs and the APS during the sector development and operation phases.

3. LEVERAGING OF CAT RESOURCES

The APS will equip all sectors (whether allocated to a CAT or not) with bending magnets because these are essential to the operation of the Storage Ring. In addition, the APS will equip as many sectors as possible, subject to the availability of funds, with the remaining instrumentation needed behind the concrete shielding tunnel to support two beamlines per sector. This additional instrumentation consists of a general-purpose 2.5-m-long ID, and the front ends for the ID and bending-magnet beamlines. In the initial phase of this effort, the APS expects to be able to equip 16 of the 34 available sectors behind the concrete shielding tunnel. Through this Beamline Initiative funds are sought to equip an additional four sectors in this manner.

To reduce beamline design and construction costs for the CATs, the APS has undertaken to identify beamline components that can be standardized, to develop engineering designs and prototypes of such components, and to share these designs and cost estimates with the CATs. An independent Beamline Standardization and Modularization Committee has contributed to this effort. Also, the APS is implementing an on-line Design Exchange to allow CATs and the APS to share drawings of beamline components and layouts. In the current Beamline Initiative, funds will be set aside to provide many of the standard components to the CATs, especially those components that have significant personnel and equipment safety implications.

4. INDEPENDENT INVESTIGATORS

Groups and individuals interested in independent access to the APS are an equally important part of the user community, and the APS is committed to providing these "Independent Investigators" with the beam time needed for successful scientific programs. Therefore, CATs must allocate an agreed-upon percentage of their beam time to Independent Investigators, whom the CATs will select by means of a proposal process (see Section 6.2). In general, the fraction of CAT beam time allocated to Independent Investigators will be 25%; it may be higher for CATs seeking more equipment support from the APS. The actual requirement for allocating the Independent Investigator beam time will be agreed upon on a case-by-case basis. Each CAT will prepare a written description of the facilities to be available for the use of Independent Investigators and will do its own scheduling and beamline-specific safety training of Independent Investigators.

Independent Investigators will follow the procedures specified by the host CAT for using beamline and experimental equipment and will perform all work in accordance with the same safety

and procedural standards that apply to CAT members. Independent Investigators will provide the CAT with accurate and accessible records that identify the users present and the experimental work to be conducted during each assigned shift. They will also provide the CAT with copies of any publications that result from their use of the APS.

5. USER COSTS

All CATs will be fully responsible for obtaining funds to design and build their beamlines, beyond what the APS will provide to them as described above. Once operations begin, users will not be charged for base operating costs, such as maintenance and utility costs for the Experiment Hall, nor for beam time used to do research that will be published in accessible literature. In accordance with U.S. Department of Energy policy, users (CATs or Independent Investigators) doing proprietary research will reimburse the APS for beam time at the full cost recovery rate. All users will reimburse the APS for incremental goods and services such as stockroom purchases, computer time, and telephone and shop services.

6. THE USER SELECTION PROCESS

6.1 Selection of Collaborative Access Teams

CATs are selected by a two-step process involving submission of (1) letters of intent and (2) full proposals from teams whose letters of intent are approved. Letters of intent are welcome from groups requiring one or more sectors as well as groups requiring less than a whole sector.

A Proposal Evaluation Board (PEB), consisting of six distinguished scientists, has been established in consultation with the APS Users Organization Steering Committee (elected representatives of prospective APS Users). The PEB evaluates the scientific merit of letters of intent submitted by prospective CATs; CATs whose letters are approved are invited to submit full proposals. Each proposal is reviewed by the PEB with input from a Scientific Review Panel with expertise in the relevant discipline(s). The PEB then makes recommendations to APS management, which has the final responsibility for CAT selection.

6.1.1 Submitting a full proposal

The content requirements for proposals, along with a description of the review process and a generic Management Plan, are given in *Guidelines and Forms for Proposals to Develop Collaborative Access Teams at the Advanced Photon Source* (Advanced Photon Source, November 1990). The major elements of a CAT proposal are as follows:

- objectives of the proposed research, and the approaches to be taken in meeting those objectives,
- description of the role of each CAT member,
- preliminary conceptual designs of the beamlines, including a feasibility analysis, cost estimate, and construction timeline,
- strategy for obtaining funding, and
- preliminary CAT Management Plan, including an organization chart, work breakdown structure, QA/QC plan, component procurement/fabrication plan, cost/schedule/ performance control plan, and safety plan.

6.1.2 Proposal review

In evaluating CAT proposals, the PEB again considers the scientific and technical merit of the proposed research and the degree to which it will use the forefront capabilities of the APS. For

each proposal, the PEB receives substantial input from one of several Scientific Review Panels and from additional independent reviewers with expertise in the specific areas of interest. Also considered are the probability of accomplishing the stated objectives, the qualifications and experience of the CAT members, the feasibility of the beamline design, and the adequacy of the financial strategy and plan for sector management. In addition, an attempt is made to balance the proposals selected for approval so that a number of scientific disciplines are represented at the APS.

6.2 Selection of Independent Investigators

Prospective Independent Investigators will submit proposals directly to CATs that are operating suitable beamlines. Independent Investigators will be encouraged to submit their proposals to multiple CATs, with the order of preference indicated. The APS will act as a clearinghouse in this process and will screen the proposals to ensure that safety issues are appropriately addressed.

The designated CATs will either use their own APS-approved proposal review process or forward the proposals to a review committee established under APS auspices. The APS will monitor the overall process to ensure that the requirements specified in each CAT's Memorandum of Understanding are met.

Table 2.1

Status of Collaborative Access Teams (CATs) in the Current Phase
(May 1993)

Letters of Intent Reviewed/Approved	35/22
CAT Proposals Reviewed by the PEB	20
CAT Proposals Approved	15
New Proposals under Preparation	5
APS Sectors Requested	22
Sectors Approved	19
Sectors Requested by the New Proposals	5
Sectors To Be Instrumented behind Shield Wall in Current Construction	16
Total Principal Investigators	500
Number of Universities	72
Number of Industries	28
Number of Government and Private Labs	18
Number of Medical Schools	8
Approximate Cost of Construction of Proposed Beamlines	$182 M
Funds Committed by Industries	$ 22 M
Funds Assured by DOE/NSF/Federal and Non-Federal Agencies	$ 76 M

CHAPTER III EXPERIMENTAL FACILITIES

1. INTRODUCTION

In this section, a brief description of the experimental facilities is provided.

There are 40 straight sections on the Advanced Photon Source storage ring, of which 34 will be available for the use of insertion devices. The remaining six sections are reserved for the storage-ring hardware and diagnostics. The storage ring incorporates 80 bending magnets; however, only 35 will be available for extracting radiation beams. One set of a bending magnet radiation port and an insertion device (ID) radiation port constitutes a sector.[1]

Generally, the ID photon beamline consists of four functional sections. The first section is the ID (or IDs) on a single straight section that provides the radiation source(s). In the case of a bending magnet beamline, the radiation is produced by the bending magnet.

The second section, immediately outside the storage ring but still inside the concrete shielding tunnel, is the front-end section of the beamline. This section contains the masks, apertures, safety shutters, photon beam position monitors, filters, window, etc., which confine, define, and control the photon beam.

The third and the fourth sections of the beamline are usually built by the user groups to their requirements but are suitably designed to meet all the APS safety and design requirements. In the third section, just outside the concrete shield wall and on the experiment floor, is the first optics enclosure (FOE). In a majority of experiments, the FOE contains optics for delivering filtered or monochromatic radiation. The crystal and/or mirror and/or multilayer optics contained in the FOE are designed to handle the expected radiation power loads from either the IDs or the bending magnet source. In a few cases, the FOE may be used to carry out white radiation experiments.

The fourth section of the beamline will vary widely depending on the nature of the investigations. Generally, it consists of beam transport, additional optics, apertures, filters, and, finally, the experimental station. This station contains the sample under investigation, radiation analyzer optics, detectors, etc., to characterize the scattering, imaging, or absorption processes. The experimental station will also contain various instruments to control the environment of the sample under study.

Typically, the third and the fourth sections of the beamline will occupy the experiment floor, which allows for a maximum of about a 70-m-long beamline measured from the center of the ID straight section. Some applications will require much longer beamlines, extending out of the Experiment Hall. Such beamlines will require additional buildings located outside the Experiment Hall to support the instrumentation and data collection. There are at least two locations to place long beamlines (200 m to 1000 m) that could extend beyond the Experiment Hall without any building obstructions.

In all, there can be at least 34 ID beamlines and 35 bending magnet beamlines on this facility, assuming that only one section 3 and one section 4 is built on each of the radiation sources.

In the current construction phase of the APS project, funds are provided to develop sections 1 (insertion device) and 2 (front end) of the beamlines in 16 sectors. As described in Chapter II, at the present time, the number of user proposals for APS sectors exceeds 16 (16 ID and 16 bending

magnet). Hence, an additional four sectors are included in this initiative. These sectors also are to be equipped behind the shield wall. The present initiative also includes construction of many standard components of sections 3 and 4 of the beamline that have safety implications and so are best supplied by the APS to the users. The user groups are raising funds to build instrumentation in sections 3 and 4 that are directly related to the scientific goals of each of the CATs in all the proposed sectors.

In this chapter (Chapter III), the scope and conceptual design for the experimental facilities of the new initiative will be provided. The reader should be reminded that most of the experimental facilities included in this initiative are often duplicated from the current construction phase. Hence, these components have been designed in various degrees of detail at this time and will be going through complete Title II engineering design review before the end of fiscal year 1993. It should also be pointed out that in estimating the ED&I costs for the experimental facilities to be provided in the Beamline Initiative, only those costs that are not covered by the design work in the current phase are included in addition to Inspection (I) costs.

2. GENERAL LAYOUT OF THE EXPERIMENTAL FACILITIES

2.1 Introduction

The APS Beamline Initiative intends to extend the experimental facility on the APS by installing equipment behind the shield wall (IDs and front ends) in four additional sectors. It also includes funds for beamline standard components that have been identified by the user groups. Many of these components have significant safety implications and, hence, are best built under the design and construction supervision of the APS. It should be understood that the exact nature of these standard components to be placed in the various CAT beamlines will be specified in the detailed beamline designs from each of the CATs, and these individual beamline designs will define all the safety requirements.

2.2 Disposition of Beamline Initiative Beamlines

The beamlines in the current construction project occupy the following 16 sectors: 1 through 8 and 13 through 20 (see Fig. 3.2.1). The set of insertion devices that will support these beamlines will include planar undulator and wigglers. These devices are typically 2.5 m long, and the currently designed front ends are capable of handling the power and power density from such devices.

In the new initiative, there are many users who will design their beamlines based on the above set of insertion devices and supporting front ends. There will be four more such sectors, that will be built in the APS Beamline Initiative. This brings the total number of sectors to 20. The placement of the new sectors on the experiment floor is likely to occupy Sectors 9 through 12 (see Fig. 3.2.1).

It is clear that most CATs would like to concentrate on designing specialized equipment related to their scientific programs rather than on routine or standard beamline components. The components such as the beam transports, first optics enclosure, and experimental stations require substantial safety-related engineering. Hence, these components will be built by the APS through the funding from this initiative so that there is uniform application of all DOE safety standards through out all the user beamlines. Identifying standard components is a nontrivial task because these components should support diverse beamline objectives. To assist this effort, the APS has obtained advice and help from a Beamline Standardization and Modularization Committee made up of experts in beamline design, construction and operation. This Committee

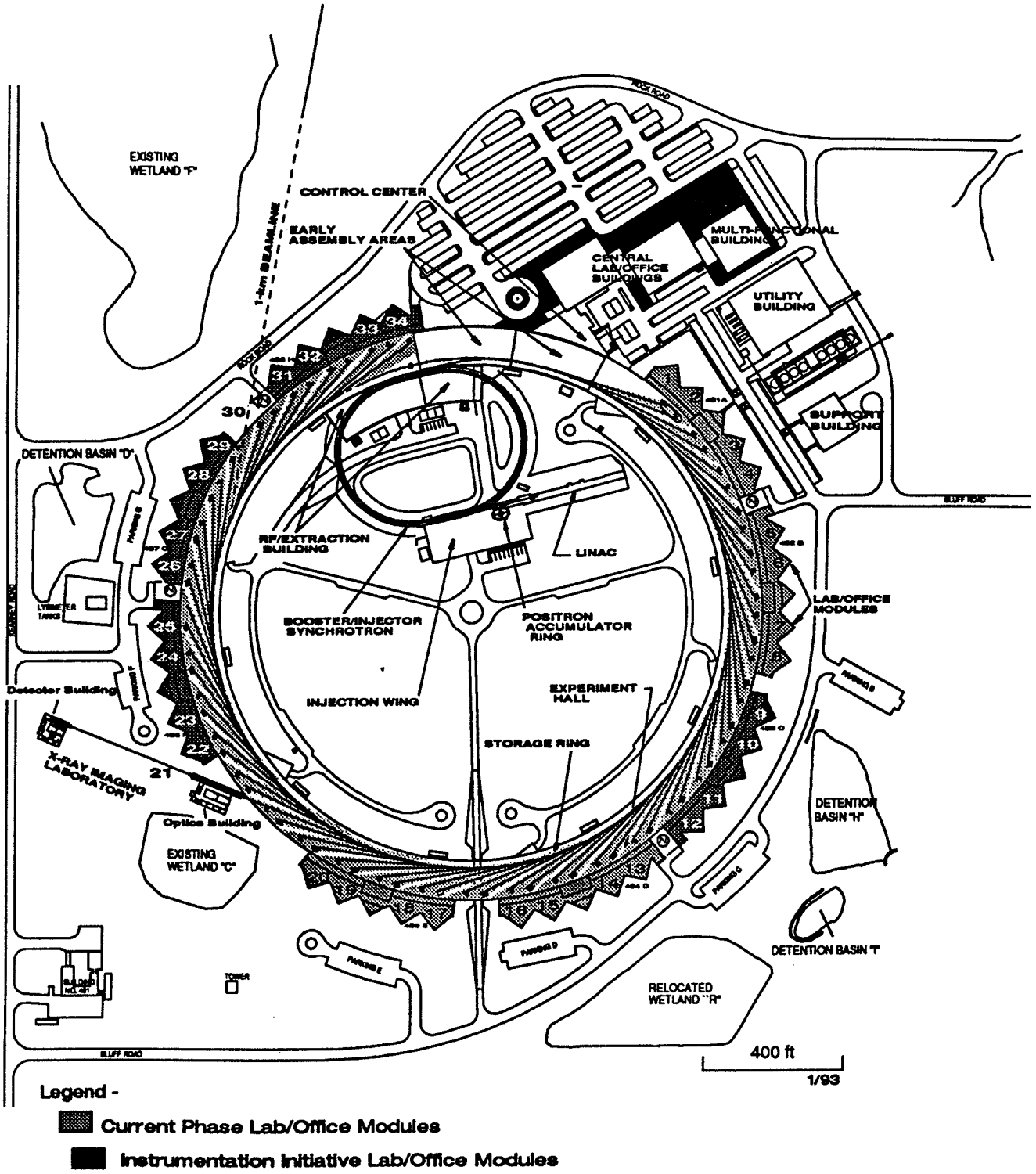

Fig. 3.2.1 Disposition of sectors at the APS. In the new initiative, Sectors 9 through 12 will be the new sectors.

has worked with the APS during the past three years and has specified the beamline standard components. Many of the CATs have recently participated in the deliberations of this Committee to contribute to the standard beamline component design process.

To support the users operating their beamlines on the APS Experiment Floor, it is necessary to provide Laboratory/Office Modules (LOMs). In the APS Beamline Initiative, provision has been made to build four LOMs to support the users. These LOMs are similar to those provided in the on-going construction phase and will bring the total number of LOMs to eight. This work of completing four additional LOMs will be carried out early in the schedule of this initiative and will be completed in 1996. This is important because it will allow the users to perform their technical and scientific activities without interference from the construction of the LOMs.

3. INSERTION DEVICES

3.1 Introduction

The Advanced Photon Source will be a powerful source of high-brilliance hard x-rays with energies above 1.0 keV. In addition to the availability of bending magnet (BM) radiation, which has a critical energy of 19.5 keV, undulator and wiggler insertion device (ID) sources can be introduced on 34 straight sections on the storage ring. The unique spectral properties and expected flexibility in the ID operation will support the APS users in the current construction phase. Proposed new techniques utilizing the full potential of ID sources will be the focal point of research for many users.

In most of the APS sectors, the IDs are composed of two sets of magnet arrays in a planar geometry that produce a spatially oscillating magnetic field along the length of the device. The arrays are typically made of permanent magnets with high permeability magnetic poles.

The spectral properties of the devices are related to the peak magnetic field, B_0, in the mid-plane of the two arrays in a planar ID. The resulting amplitude of oscillating motion of the particle beam and the maximum slope angle of the trajectory depend linearly on both B_0 and the period of the device, l_0, through the deflection parameter, K, defined by

$$K = 0.933\, l_0 \text{ (cm) } B_0 \text{ (Tesla)}.$$

For K less than approximately ten, the maximum slope angle is $\theta = K/\gamma$, where $\gamma = 13699$, the relativistic mass enhancement for the 7-GeV positron. This is to be compared with the natural opening angle of synchrotron radiation, $\psi \approx 1/\gamma$, which is approximately 73 μrad for the 7-GeV APS storage ring.

The spectral properties of a planar device will depend on the relative values θ and γ. In the undulator regime, where $K \approx 1$, the radiation from each part of the trajectory is within the radiation opening angle ψ. This results in spatial and frequency bunching that gives rise to a typical undulator spectrum consisting of narrow energy bands of radiation called harmonics. The energy of the harmonics is dependent on the energy of the positron and the magnetic field experienced by the positron. Typically, the radiative divergence at the harmonic energy is a fraction of the natural opening angle, ψ, and the photon density at this energy is enhanced.

In a planar wiggler, where $K \geq 5$, the output from the device is the sum of intensities from each magnetic pole, and the spectral output is similar to that from an equivalent BM but is

contained within a horizontal angular range of $\pm K/\gamma$. The spectral output on axis is approximately N times the output from an equivalent BM source, where N is number of magnetic poles in the wiggler.

The spatial and angular distribution of the 7-GeV positron beam will affect the undulator spectrum most severely. Because the positrons in the beam are independent, the effective source size and angular distribution are a convolution of the radiative and particle beam distribution parameters.

The capability to design IDs that can provide x-rays with different polarization properties is as yet a new area, which will be exploited in the APS Beamline Initiative. During the past year, the APS has added polarization insertion devices to its standard list because some of the CATs have requested them. Hence, as a part of this initiative such devices will be built. These complex insertion devices are generally made up of four magnet arrays providing the oscillatory field in the x and y directions. In these IDs, the magnetic field vector experienced by the positron moving in the z direction is given by

$$\mathbf{B} = \mathbf{e_x}\, B_{xo} \cos(2\pi\, z/\lambda_o) \pm \mathbf{e_y}\, B_{yo} \sin(2\pi\, z/\lambda_o),$$

and the deflection parameter is given by

$$K_{x,y} = 0.933\, B_{xo,yo}\, \lambda_o.$$

Based on the values of K_x and K_y, the positron will move with relativistic velocities either in a helical or an elliptical trajectory. Hence, depending on the relative values of K_x and K_y, one can generate undulator or wiggler radiation with different polarization contents.

3.2 Insertion Devices

Three IDs have been identified as standard x-ray sources. These include one planar undulators and two wigglers.[2] Undulator A, which has Nd-Fe-B permanent magnets and vanadium permendur poles to form a hybrid geometry, is capable of spanning the photon energy interval from 4.7 to about 40 keV using the first- and third-harmonic radiation. Wiggler A, with a hybrid magnet geometry and a critical enrgy (E_c) of 32.6 keV, and an elliptical motion wiggler, with a magnetic structure based on permanet magnet and electromagnets and a critical energy of 31 keV, have been designed. These critical energies are well above the 19.5 keV for the bending magnet radiation. Figure 3.3.1 shows a comparison of the on-axis brilliance of the BM source to that of the Wiggler A and Undulator A sources.

3.2.1 Undulators

The design parameters for Undulator A have been well developed and design work is beyond the Title II phase. As a part of the study, Monte-Carlo simulations of the radiation properties of these IDs have been performed.[3] A summary of the properties of these IDs is given in Table 3.3.1. Figures 3.3.2-4 show the energy spectra of radiation from Undulator A for three values of K. Such devices are now being procured as part of the current construction phase.

The planar geometry of this undulator has a hybrid configuration in which the magnetic field strength and distribution depend on the geometry of the pole tips. The field quality is also determined by the magnetic and geometric quality of the magnetic material. In arriving at the magnetic structure of this device, various geometric parameters of the structure are iteratively optimized through a two-dimensional field computation (yz plane). The resulting parameters are

presented in Table 3.3.2. Three-dimensional (3D) effects are estimated in order to obtain a pole width and a magnet width that provide the required field homogeneity.

Figure 3.3.5 shows the optimized two-dimensional magnetic flux lines of a quarter period of the 3.3-cm-period undulator at gaps of 1.15 and 3.00 cm. The pole piece has been chamfered at 45° to avoid both flux saturation at the corners of the pole tip and the demagnetization of the permanent magnet material.

Undulator A will support the special needs of the user community, namely, the capability to generate "broad-band" undulator radiation. This is accomplished by tapering the two magnetic arrays of a planar undulator along the z axis. This concept has already been tested by the APS Experimental Facilities staff and will be incorporated in all the devices constructed.

The undulator assemblies have magnetic field end-correctors. A detailed analysis of the geometry of the end-correctors has been experimentally evaluated as a part of the R&D program. This has provided a solid basis for providing the end-corrector design and the pole width specification.

In Table 3.3.3, partial specifications for the periodic magnetic structure of Undulator A are presented. These specifications assure sufficient dynamic aperture for the storage-ring lattice to provide its optimal performance.

As a part of the design activity in the current phase, Undulator A has now been fully specified with regard to its design tolerance requirements. A number of Undulators A are being procured during FY 1993-94 to complete the current phase construction and will be commissioned and operated during FY 1995-96. This experience should greatly enhance our capability to build the undulators in the APS Beamline Initiative.

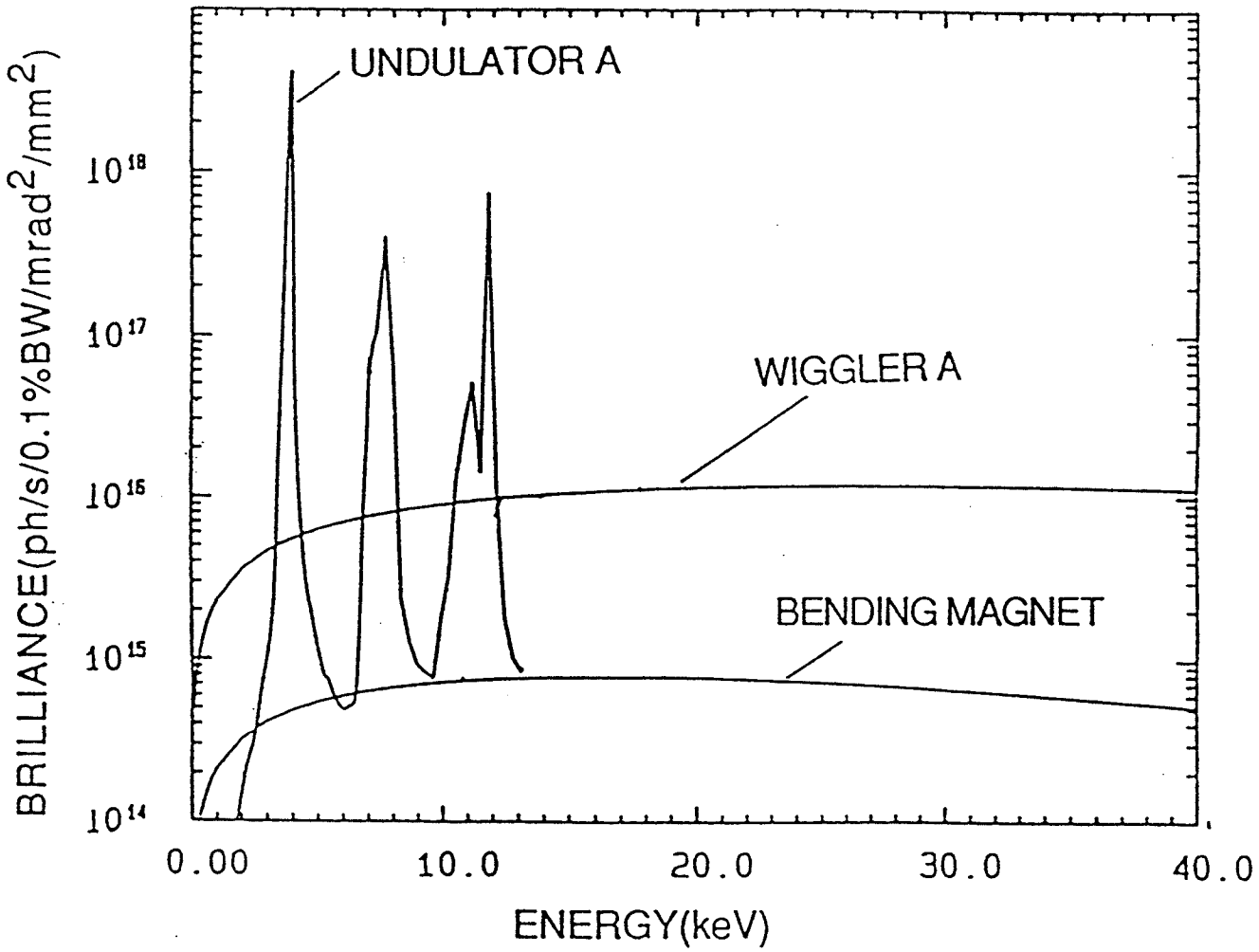

Figure 3.3.1 A comparison of the on-axis brilliance for the APS bending magnet source, Wiggler A, and Undulator A

Table 3.3.1

Summary of Insertion Devices for Type A Sectors

	Undulator	Wiggler
	A	A
Period (cm)	3.3	8.5
Number of Periods	72	28
Length (m)	2.4	2.4
Undulator 1st-Harmonic		
Minimum (keV)	4.2	
Maximum (keV)	14	
Wiggler Critical Energy		
E_c (keV) at 2.2 cm gap		32.5
K_{max}	2.17	13.4

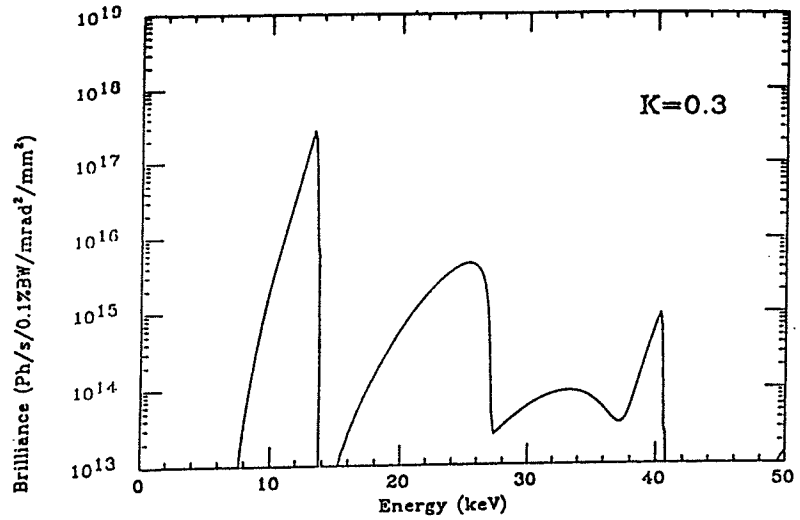

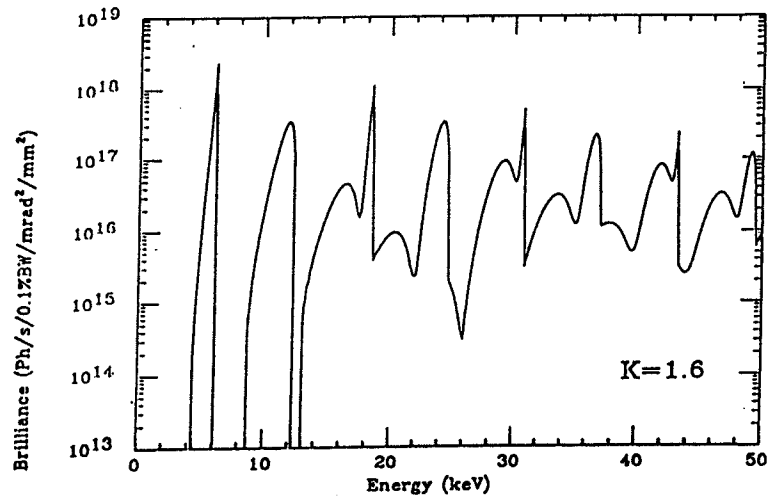

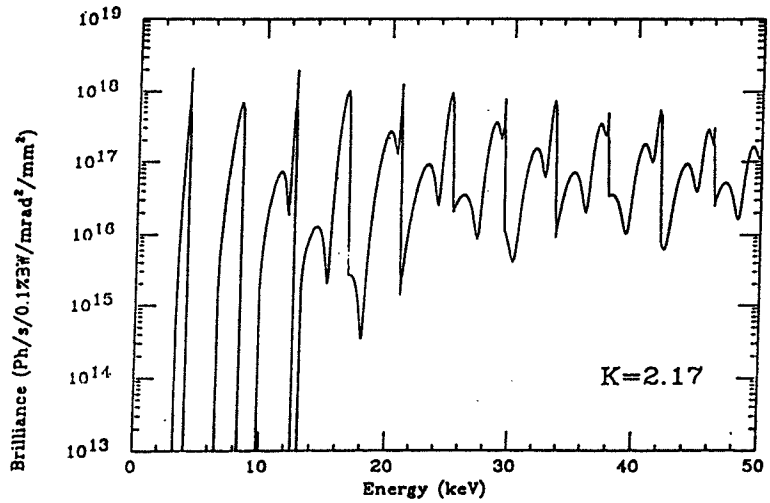

Figures 3.3.2 - 3.3.4 Energy spectra of radiation from Undulator A for three values of K. The positron beam parameters in these calculations are: horizontal beam width σ'_x: 308 μm, vertical beam height σ'_y: 85 μm, horizontal beam divergence σ'_x: 24 μrad, vertical beam divergence σ'_y: 9 μrad

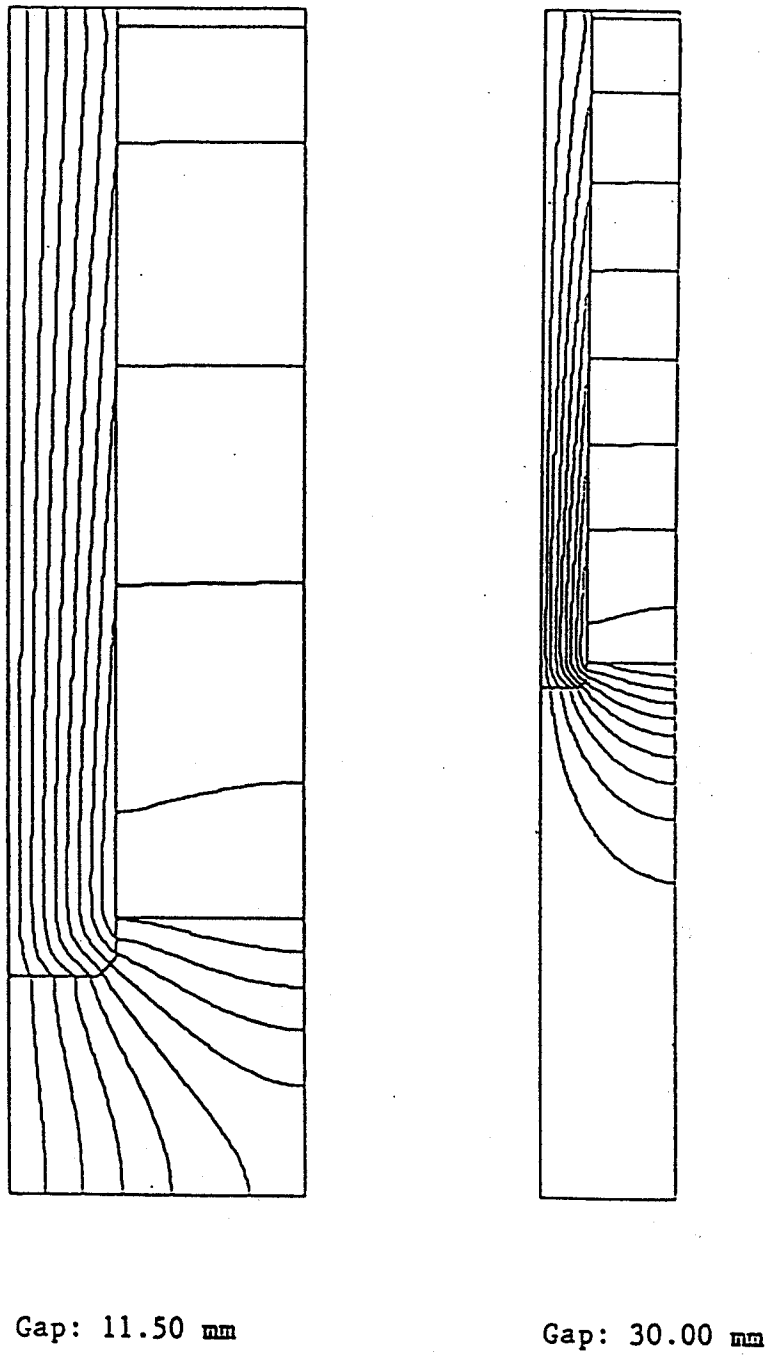

Figure 3.3.5 Optimized 2D magnetic flux profile of a quarter period of Undulator A

Table 3.3.2

Optimized Design Parameters of Nd-Fe-B Hybrid Undulator A

	Undulator A
Undulator Period (cm)	3.3
Magnet Gap	
Minimum (cm)	1.15
Maximum (cm)	3.0
Pole Width- x Direction (cm)	6.00
Pole Height - y Direction (cm)	6.0
Pole Thickness - z Direction (cm)	0.56
Magnet Width - x Direction (cm)	7.80
Magnet Height - y Direction (cm)	6.85
Magnet Thickness - z Direction (cm)	1.10
Pole Tip Overhang - y Direction (cm)	1.00
- x Direction (cm)	0.90
Peak Field on Axis - Maximum (G)	6917

Table 3.3.3

Partial List of Specifications for Undulator A

Parameter	Specification
Maximum Random Field Error (%)	0.48
Gap Resolution (μm)	2.5
Transverse Roll-Off at ±1 cm (%)	0.5
Total Steering Errors (G-cm)	<100
Normal Components of:	
Integrated Quadrupole (G)	<50
Integrated Sextupole (G/cm)	<200
Integrated Octupole (G/cm^2)	<300

3.2.2 Wigglers

The prerequisite for wigglers is a large K value, which will result in a continuous and wide energy spectrum. This is achieved by having either a large B_0 and/or a large λ_0. The critical energy of the spectrum can be made either large or small by the proper choice of peak magnetic field. In Table 3.3.4, design parameters for APS Wiggler A are given.

The Title II design of this device is complete, and it will be procured for the current construction phase before the end of FY 1993. The experience gained in this process and in installation and commissioning during FY 1994-95 will be of great benefit during the Beamline Initiative.

Table 3.3.4

Design Parameters for Wiggler A

Parameters	Wiggler A
Peak Field on Axis (G) at 1.15 cm gap	1690
Peak Field on Axis (G) at 2.2 cm gap	1000
Period (cm)	8.5
K_{max}	14
Number of Periods	28
Length (m)	2.4
Critical Energy (keV) at 2.2 cm gap	32.6
Structure	Nd-Fe-B
Flux at Critical Energy 10^{14} (ph/s/0.1%BW/mrad)	8.0

3.2.3 Elliptical Motion Wiggler

A new insertion device requested by the users is the elliptical multipole wiggler. The principle of such a device is illustrated in Fig. 3.3.6, and a conceptual configuration is shown in Fig. 3.3.7. This wiggler consists of one set of magnet arrays that produces a large vertical magnetic field (B_y) and a second set of magnet arrays that produces a small horizontal field (B_x). The two fields B_x and B_y are $\pi/2$ out of phase. The resulting field is helical with different radii in the horizontal and vertical planes. When $K_y >> 1$ and $K_x \approx 1$, the on-axis radiation is circularly polarized. The radiation is effectively a superposition of the off-plane radiation from a bending magnet source because half the period of the positron orbit can be regarded as the orbit through the bending magnet. The intensity of the on-axis radiation from such a wiggler is 2N times higher than that from a bending magnet, N being the number of periods in the wiggler.

The choice of K_x is crucial for generating both a high degree of polarization, P_c, and high brightness. Large values of K_x will lead to a nearly unit value for P_c; however, in that case, the on-axis brightness will be small. The elliptical multipole wiggler to be built in the APS Beamline Initiative will have $K_y \approx 15$ and $K_x \approx 1$. With $\lambda = 15$ cm, such a device will have a critical energy of about 32 keV and a P_c value of about 0.9 over a wide energy range. In Fig. 3.3.8, the variation of P_c as a function of photon energy for this device is shown for various values of K_x. The on-axis relative intensity of the circularly polarized beam as a function of photon energy for various values of K_x is shown in Fig. 3.3.9.[4] K_x will be chosen depending on the nature of the experiment. A device of this type has been tested on the Accumulator Ring at TRISTAN.[5]

It is equally important to note that the value of P_c can be degraded by the vertical beam divergence σ_y', or by large experimental angular acceptance, θ. To minimize such degradations, the following equation should be satisfied:

$$K_x > \gamma [\sigma_y'^2 + (\theta/2)^2]^{1/2} .$$

Use of pinholes placed along the beamline can achieve $\theta << \sigma_y'$. For the APS, $\gamma \sigma_y'$ is 0.12, and, hence, the above condition is easily satisfied for all values of $K_x > 0.2$.

The translation of the set of x-magnet arrays relative to y-magnet arrays in this device will produce different states of polarization. For example, if the two sets of magnet arrays are in phase, linearly polarized radiation will be produced. On the other hand, if the phase angle between the two sets of magnet arrays is either $+\pi/2$ or $-\pi/2$, the on-axis radiation will be either right or left circularly polarized. The phase change can be accomplished by translating the horizontal magnet array from $-\lambda/4$ to $+\lambda/4$.

The ability to switch between various polarization states in a single investigation will be of considerable importance. This switching would demand the translation of one set of magnet arrays relative to the other set along the z direction. However, it is difficult to accomplish such mechanical movements on a short time scale because of strong magnetic interactions between the two sets of magnet arrays. One way of switching the state of polarization is by employing electromagnets in the horizontal magnet arrays. Such a device will be capable of switching the circular polarization state between right- and left-handedness within milliseconds. The design of the horizontal electromagnetic arrays will need detailed considerations on reducing eddy currents.

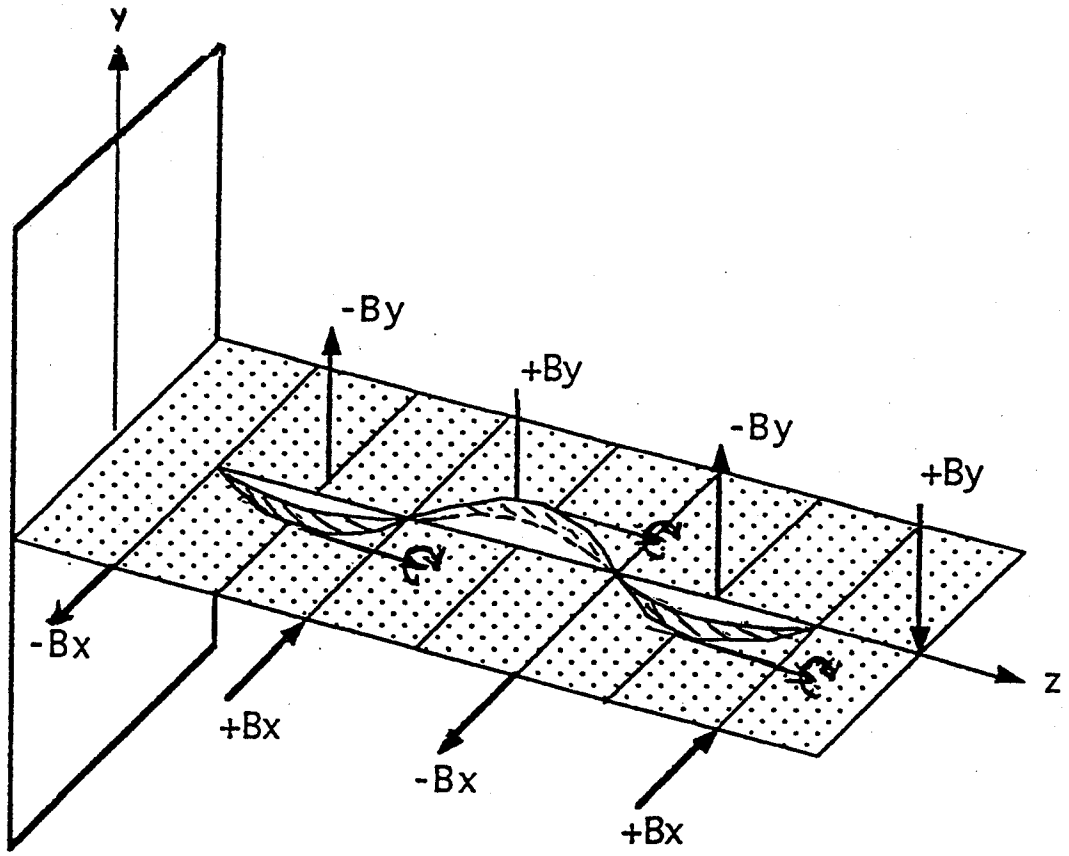

Figure 3.3.6 Placement of magnetic field components to generate circularly polarized radiation from the elliptical motion of positrons in a wiggler. The B_x and B_y components have a special phase difference of $\pi/2$ along the z axis. In this case, the on-axis radiation is right circularly polarized (Ref. 5)

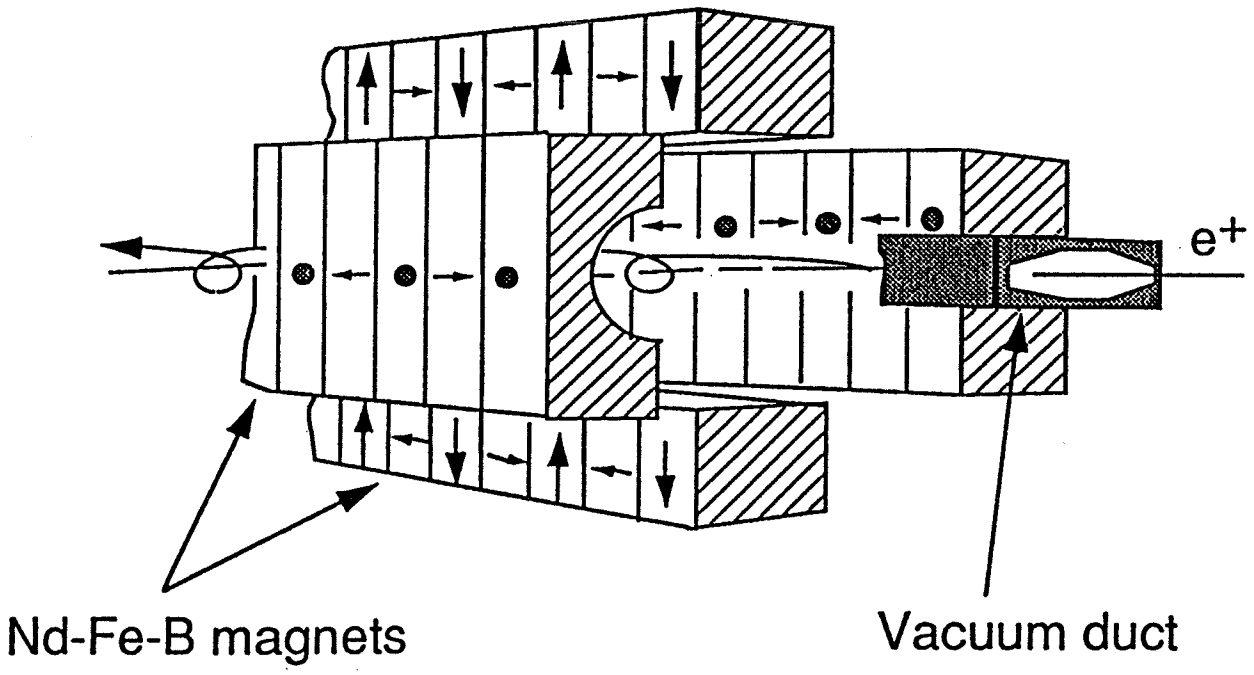

Figure 3.3.7 Conceptual design for the elliptical motion wiggler

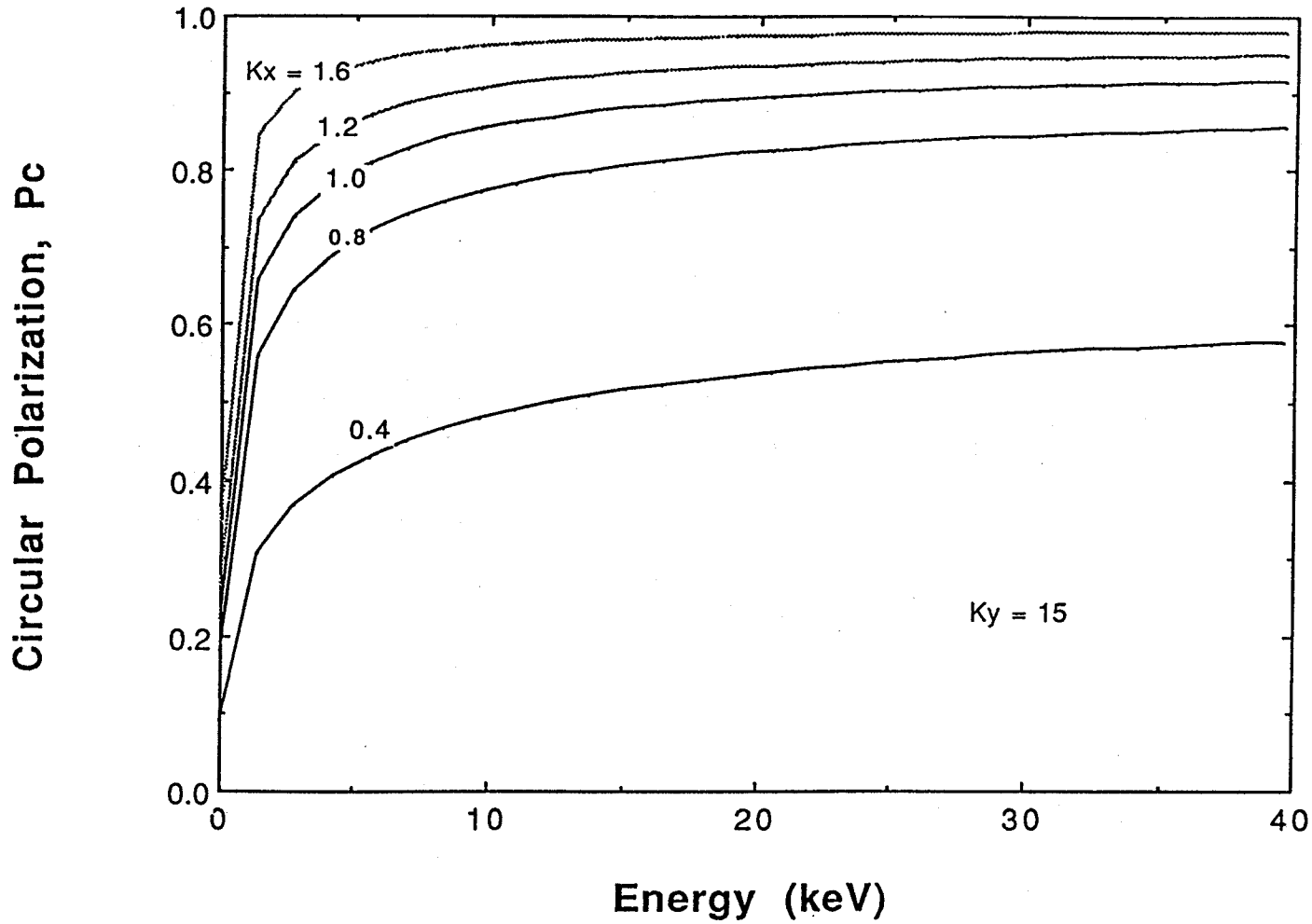

Figure 3.3.8 Variation of P_c as a function of photon energy for the elliptical motion wiggler with a period of 15 cm operated at 7 GeV for $K_y = 15$ and various values of K_x

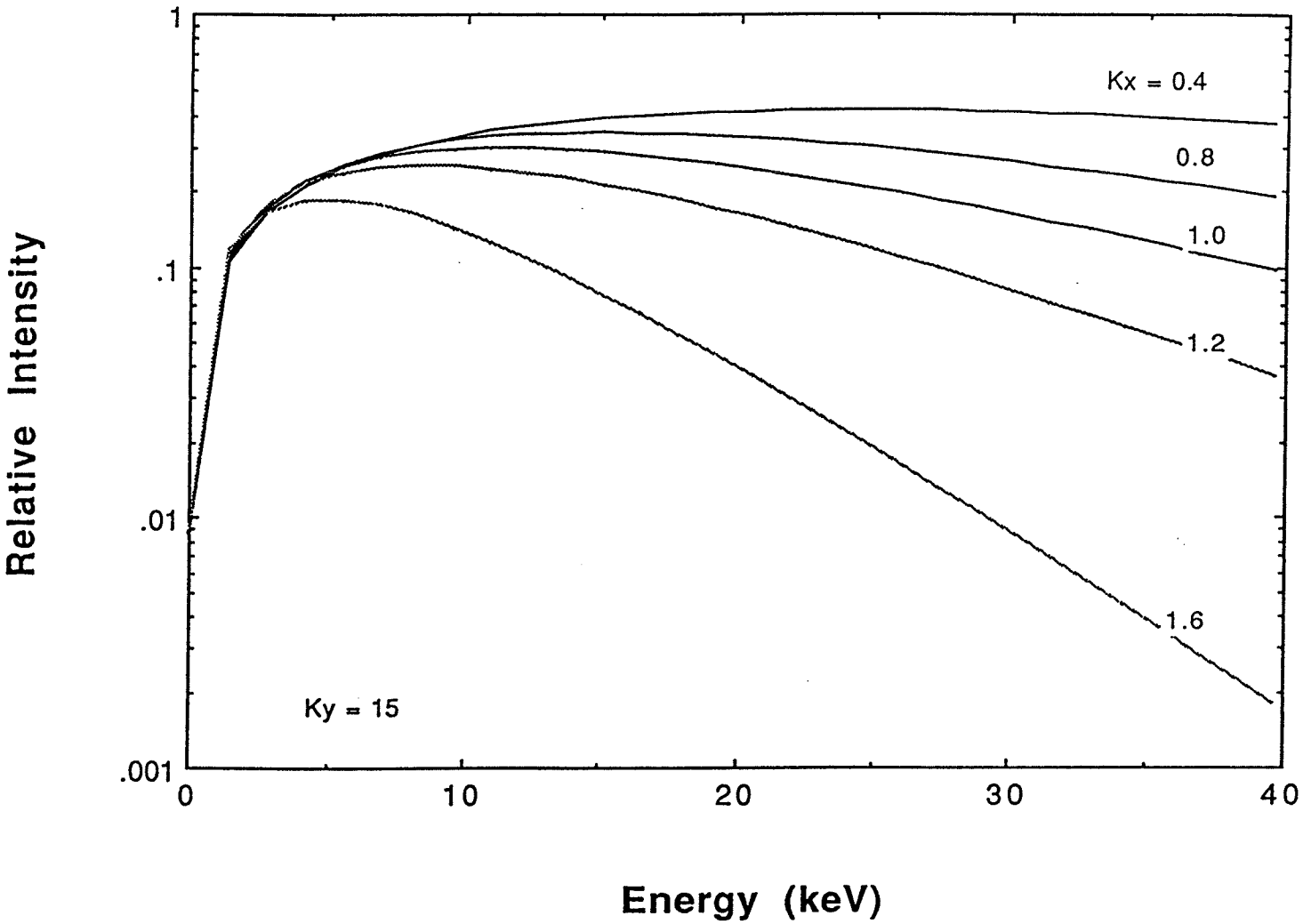

Figure 3.3.9 On-axis relative intensity of the circularly polarized beam as a function of photon energy for various values of K_X

A prototype of this device is being designed during FY 1993 and will be operated at the NSLS during FY 1994-95.

3.2.4 Insertion Device Vacuum Chambers

The ID vacuum chamber provides a straight section continuum of the storage ring enabling the positron beam to pass through the mid plane of the ID. The trajectory of the beam through the ID results in an intense x-ray beam. The straight section ID vacuum chamber requires a vacuum level of 10^{-10} Torr, similar to that of the storage ring. Poorer vacuum can result in unacceptably high production of bremsstrahlung radiation from the scattering of the positron beam from gas molecules.

The design of the vacuum chambers has received considerable attention during the current phase design studies. The tolerance specifications are a very critical element of this design study. Prototype chambers have been built and tested as part of the current phase R&D studies, and the information obtained will provide the necessary input for the Beamline Initiative construction activities.

The overall length available in each sector of the storage ring for the ID vacuum chamber is 4.8 m. This length excludes the transition section between the storage ring vacuum chamber and the ID chamber. Because the devices will generally be 2.4 m long, in the final design the length of ID vacuum chamber may be limited to this length with the remaining part of the straight section being occupied by the standard storage ring vacuum chamber.

The ID vacuum chamber has a cross section that is considerably smaller in dimension than that of the main storage ring chamber. A cross-sectional view of such a chamber is shown in Fig. 3.3.10. The ID chamber consists of an elliptical positron beam chamber connected to a pumping antechamber (containing NEG strips) through a narrow channel. The material of choice for the chamber is a 6063-T5 aluminum alloy, and the geometry is achieved through an extrusion process.

The positron beam chamber is situated in the mid-plane region of the upper and lower magnet arrays of the ID. The maximum magnetic field developed by the ID magnets depends on the minimum gap. This gap over the length of the ID and its dimensional tolerance determine the maximum magnetic field achievable for an ID. For reasons of energy tunability, it is desirable to reach the largest field possible at the minimum gap. For the ID chambers to be installed in the APS Beamline Initiative, the nominal minimum dimension of the positron beam chamber is 10 mm. A detailed analysis of various mechanical tolerances leads to a total tolerance budget of 1.5 mm for the vacuum chamber and its supporting structure. With the manufacturing technologies available, this tolerance should be easily achievable. This ID vacuum chamber will lead to a minimum magnetic gap of 1.15 cm for the ID, which fully supports the spectral requirements from all the insertion devices.

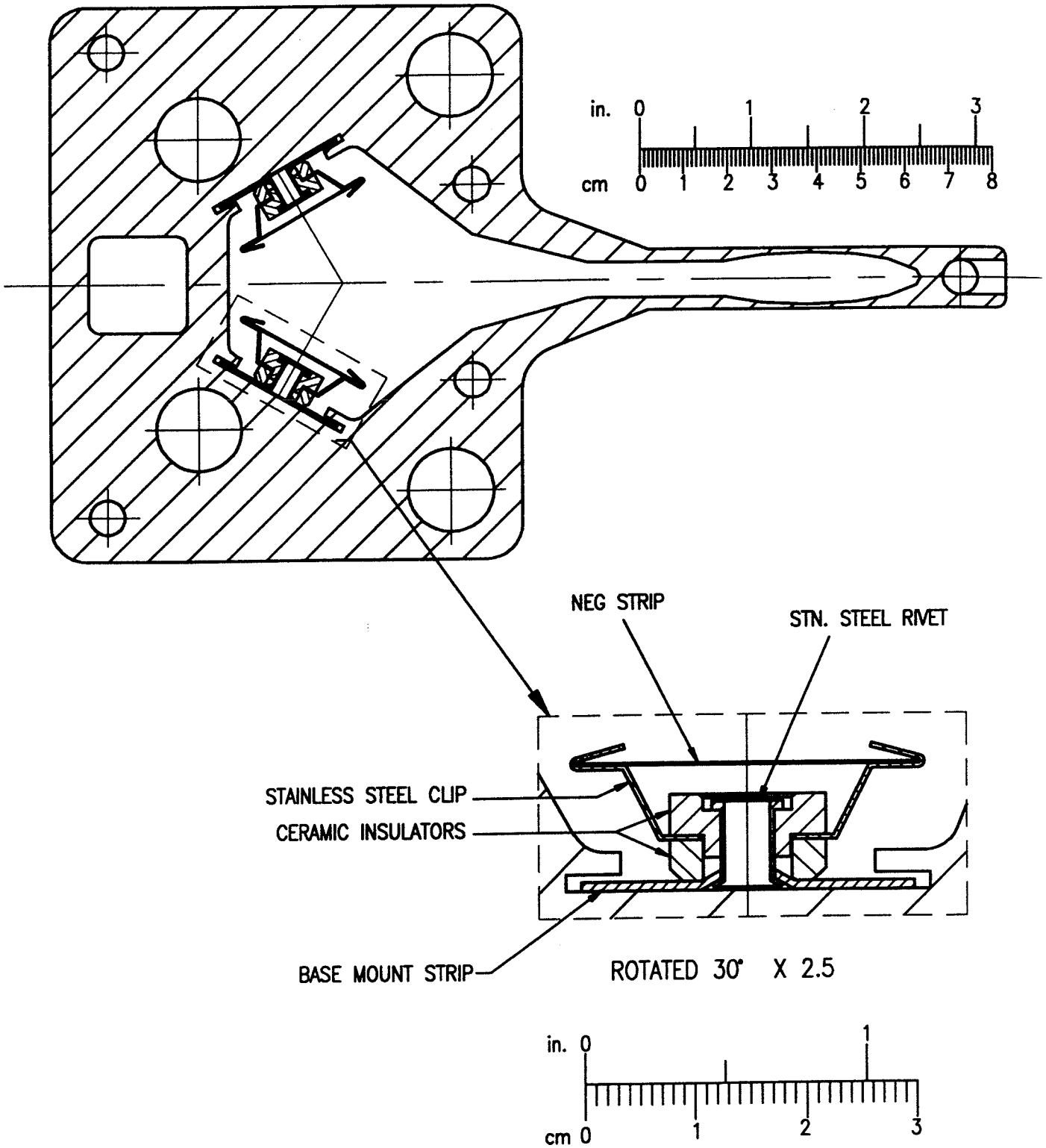

Figure 3.3.10 Cross section of the ID vacuum chamber

4. BEAMLINE FRONT ENDS

4.1 Introduction

The front end of a beamline has specific functions. These have been defined for the current phase beamline front ends, and the principal functions are listed below:

- maintain the storage-ring vacuum integrity,
- confine the photon beam power to safeguard all front end and beamline components,
- maintain adequate capability to handle the largest power and power density on front end components,
- ensure personnel safety with triple redundancy and logical control systems during both the commissioning and operating phases,
- provide required information on the angular and spatial position of the photon beam to keep it to a specified stability.

In the current phase construction, 32 front ends will be built; 16 of these will be on the ID beamlines and the remaining 16 will be on the BM beamlines. APS IDs include both wigglers and undulators, and the properties of the radiation produced by these devices will vary. However in the current construction phase, ID front ends are designed to handle the radiation from all the proposed devices.

A layout of the front-end components for an ID beamline is shown in Fig. 3.4.1. Starting from the source end, the following components are identified:

Exit Valve - An all-metal valve that isolates the front end from the storage ring. Opening this valve is controlled administratively. It is open when the ID is operational.

Photon Beam Position Monitor (photon BPM) - A system capable of detecting the position of the beam both in the x and y directions without interfering with the central part of the beam. In combination with a second photon BPM placed 5-7 m downstream, it specifies the precise angular and spatial location of the beam. Photon beam missteering is controlled to within 10% of its angular and spatial size with a feedback loop to correction magnets in the storage ring that adjust the position and angle of the positron beam.

Fixed Mask (Aperture) - A vertical and/or horizontal set of cooled plates that confine the beam to a defined size and admit radiation into downstream components.

Collimators - These components define the line of sight to the source point and admit a cone of radiation. Portions of the beam outside the predefined cone, scattered x-rays, and the bremsstrahlung radiation are absorbed by the collimator body.

Slow Valve - An all-metal, remotely actuated, non-cooled UHV valve that seals to isolate the storage ring vacuum from any vacuum breach in the downstream transport.

Fast Valve - A very fast acting valve, non-cooled, that retards the shock wave progression upstream in case of a vacuum breach in the downstream components.

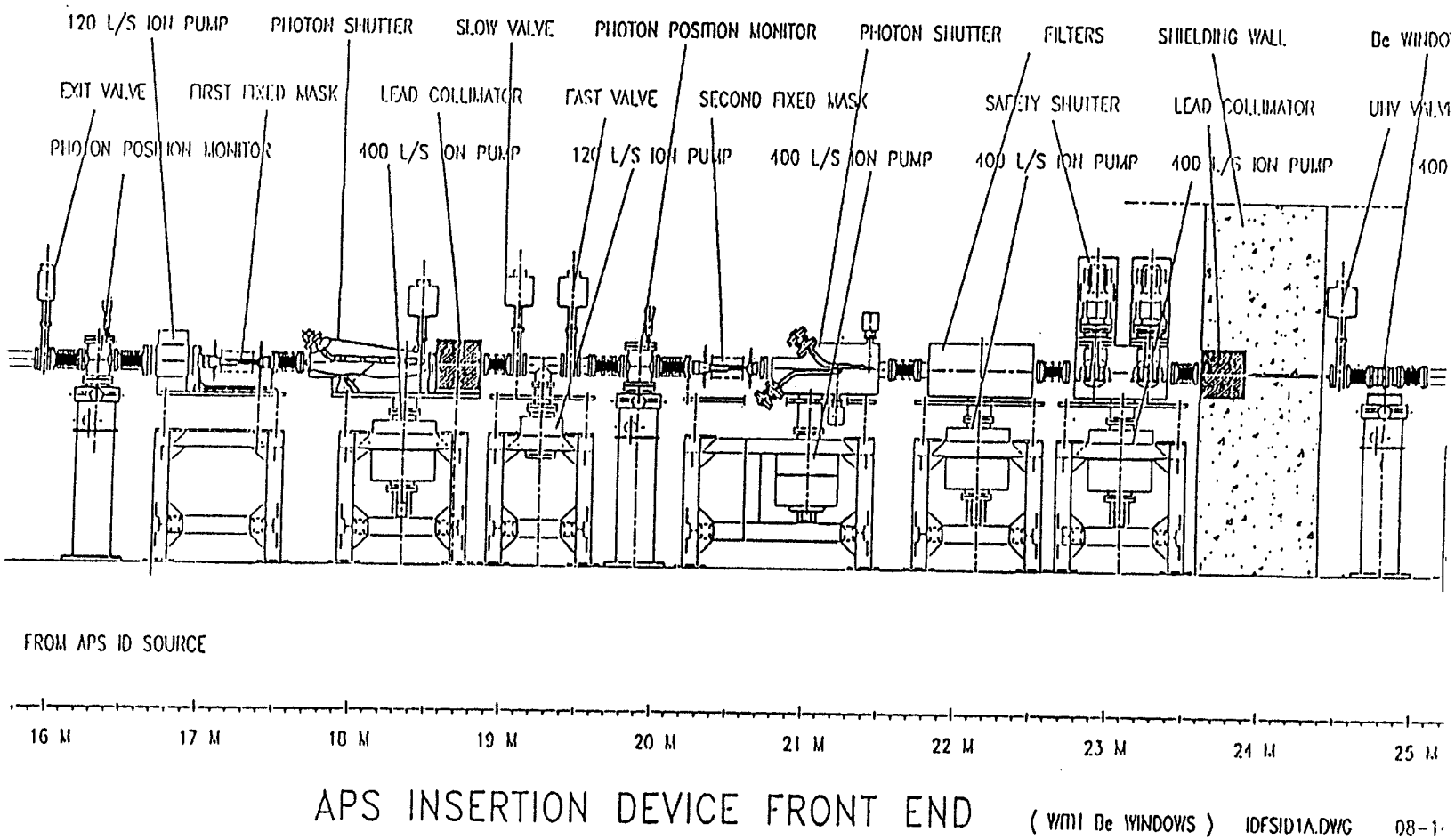

Fig. 3.4.1 Layout of the components of an insertion device beamline front end

Filters - Typically, cooled pyrolitic graphite or diamond foils to absorb and dissipate heat from unwanted spectral portions of the photon beam.

Safety Shutters (Injection Stops) - High-Z, metal-based safety blocks, usually in tandem, that absorb bremsstrahlung radiation produced during cold fills of the positron beam into the storage ring.

Window - A vacuum separator that isolates the vacuum of the front end and the storage ring from that of the beamline on the experiment floor. This window (located outside the shield wall) allows the transmission of the photons to the experiment. A differential pumping system has been developed to replace the window when low energy radiation is to be delivered to the experiment.

A detailed logic has been developed with the required redundancy to provide personnel safety in the operation of all the components of the front end. The BM front end has basically the same set of components. The capability to handle the power delivered by various radiation sources is crucial to the final design of all the front-end components. Currently, R&D and testing of prototypes of various front-end components are underway to meet the demands of the radiation sources proposed. The procurement of front end components required for the current phase will begin in FY 1993, and the components will be installed and commissioned during FY 1994-95. This should assure timely implementation of front ends for four IDs and four BM sources in the Beamline Initiative.

4.2 Description of the Front Ends

A detailed discussion of the angular dependence of the radiation power from the insertion device sources and bending magnet source can be found in the current phase Design Handbook. The crucial number is the peak power density normal to the surface at a specified distance from the source where the various front-end components will be located. The total power from the IDs is equally important in the design of the front-end components. Many measures are being implemented in the front-end design, first, to reduce the power and, second, to handle the power. In arriving at the engineering designs of the components of the front end, extreme care is taken to select the best heat transfer methodology, material properties, stress reduction methodology, etc.

Because of the large power densities involved, front-end components such as masks or shutters cannot be placed at normal incidence to the ID radiation beam, regardless of how efficiently they are cooled.

In Table 3.4.1, the power densities and powers delivered by various IDs are given.

Table 3.4.1

Power and Power Densities Delivered
by Various Insertion Devices [a]

	Undulator A	Wiggler A	Elliptical Wiggler
Device Length (m)	2.5	2.5	2.5
Maximum Field (T)	0.8	1.0	1.0
Total Power (kW)	5.0	4.6	7.8
Peak Power Density[b]	150	26	42
Peak Flux @ 16 m [c]	0.59	0.10	0.16
Peak Flux @ 24 m [c]	0.26	0.05	0.07

[a] The current in the storage ring is assumed to be 100 mA.
[b] Units are ($kW/mrad^2$)
[c] Units are (kW/mm^2)

5. STANDARD COMPONENTS OF THE BEAMLINES

5.1 Introduction

In this section, current plans for building the standard components of the beamlines in the APS Beamline Initiative are presented. It has been pointed out earlier that the standard components of the beamlines have been identified and specified using the input from the Beamline Standardization and Modularization Committee and members of the CATs. There are many safety consideration for such components. They include radiation shielding requirements for synchrotron radiation from various planned insertion devices and the bremsstrahlung, ALARA design objectives, and interlocks with adequate visual and audible alarms compatible with APS control system. The exact compliment of standard components that will be built will be decided after reviewing all the CAT beamline designs. At this time, the conceptual designs of these CAT beamlines are being reviewed. The Title I designs of the CAT beamlines will be reviewed by the APS during FY 1993, and this process will lead to the standard components that the APS will build under this new initiative.

In a separate document, *APS Beamline Standard Components Handbook*, all the standard components have been specified. This document is regularly updated to include new input from the users. As a part of this activity, the beamline vacuum and shielding requirements have been specified in detail.

5.2 Description of Beamline Standard Components

5.2.1 Filters

Filters in beamlines are primarily used to reduce the bandpass of the beam and thus the power load on the elements that interact with the beam (windows, monochromator crystals, etc.). For x-ray beamlines, a combination of high pass and low pass filters, such as a beam-deflecting mirror is very effective. These combinations are also able to suppress higher order reflections in the monochromatic beam.

The filter assembly is designed to provide a modular beamline filtering system. The assembly consists of a housing with a selection of linear filter mounts. The assembly or the linear filter mounts can be placed in every vacuum segment of the user's beamline. For ease of replacement, the filter foils are mounted on standardized filter frames. The filter frames can carry up to five different foils. The filters are linearly moved into the beam by a light load actuator. The positions of the filters must be interlocked with the beam. This protects the filter frames from being hit by the beam. The filter frames are directly cooled. In the case of radiation cooling, the surrounding vacuum chamber is protected by water-cooled radiation shielding or is directly cooled. A typical filter assembly is shown in Fig. 3.5.1.

5.2.2 Beamline Windows

Windows are used to separate beamline sections with different vacuum and pressure conditions, such as UHV, HV, and ambient pressure. For the transmission of radiation through the windows, the design criteria established for the filters is used. The vacuum tightness of the windows ($<1X10^{-10}$ torrl/sec) together with the pressure difference at a transition from vacuum to atmosphere are additional complications of the window design. The main difficulty is introduced by the heat load of the ID beams, which can introduce power loads in the kW range. In these cases, windows have to be protected by filters, which absorb a large share of the heat load. Such filter-window combinations, however, severely limit the availability of the radiation spectrum below about 5-6 keV. For many CATs, it would be desirable to operate the beamline

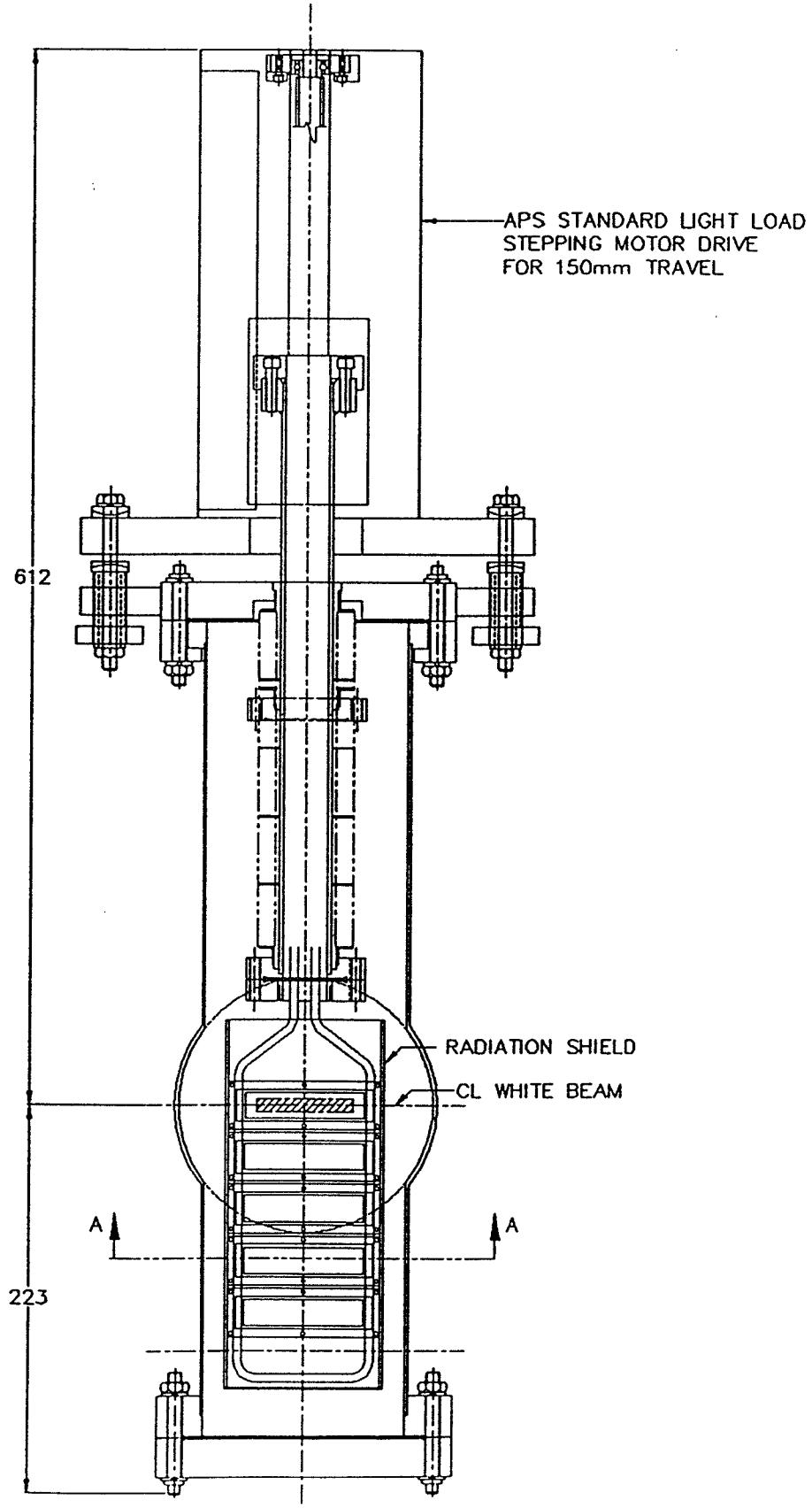

Figure 3.5.1 APS beamline filter assembly

without a window on the ID beamlines to retain the flexibility of using the entire energy spectrum. It should be pointed out that if the CAT's interest is primarily in the hard x-ray region (> 10keV), the use of Al windows may be appropriate.

At the APS, failure criteria and thermal and stress analysis of filters and windows have been carried out as part of the R&D program in support of construction.

The following are the design criteria for a variety of conditions:

1. A window suitable for white radiation from an APS wiggler (with K = 14 and operated at 7 GeV, 100 mA stored current). This can also be used for monochromatic radiation from the APS IDs.

2. A double exit window to deliver both white and/or monochromatic radiation from either an APS ID or bending magnet source.

3. A window suitable for transmitting bending magnet white radiation with a horizontal width of approximately 110 mm.

4. A differential pump capable of supporting windowless configuration with a minimal aperture of 10 x 78 mm and maintaining at least two orders of magnitude difference in pressure.

In Figs. 3.5.2-5, the Title I design for all the above four configurations is provided.

Additional R&D work will be pursued to test the feasibility of pyrolytic graphite windows and diamond windows.

5.2.3 Beamline Slits

The slits that will be used in the beamlines will require a sophisticated design that depends on their application. For example, the white radiation slit normally has to absorb a large amount of heat from the radiation beam, while the monochromatic slits sometimes need to provide sub-micron collimation. Thus, the design of slits and the choice of the material for their construction is closely related to their application. In addition, the slits might directly impact the scientific goal of the beamline. Hence, the CATs will contribute in a major way to the slit design.

For the present, the APS has put much emphasis on the power handling issue related to slit designs. These designs will meet much of the user needs early on during beamline operation. More specific designs to cater to specific scientific experiments will be under taken by the APS as the needs become better defined.

The Title I designs for the following slits are now complete:

1. An ID white beam slit capable of positional resolution of 2 μm and positional reproducibility of 5 μm. This slit can provide a vertical aperture of 0-30 mm and a horizontal aperture of 0-100 mm. The beam intercepts the slits with a grazing incidence of about 3°. Water-cooled copper foam removes the heat from the slit blades. The design uses an APS standard heavy load stepping linear actuator to provide the necessary motion.

2. A BM white beam slit capable of positional resolution of 10 μm and positional reproducibility of 25 μm. This slit can provide a vertical aperture of 0-30 mm and a horizontal aperture of 0-150 mm. The beam intercepts the slits with a normal incidence.

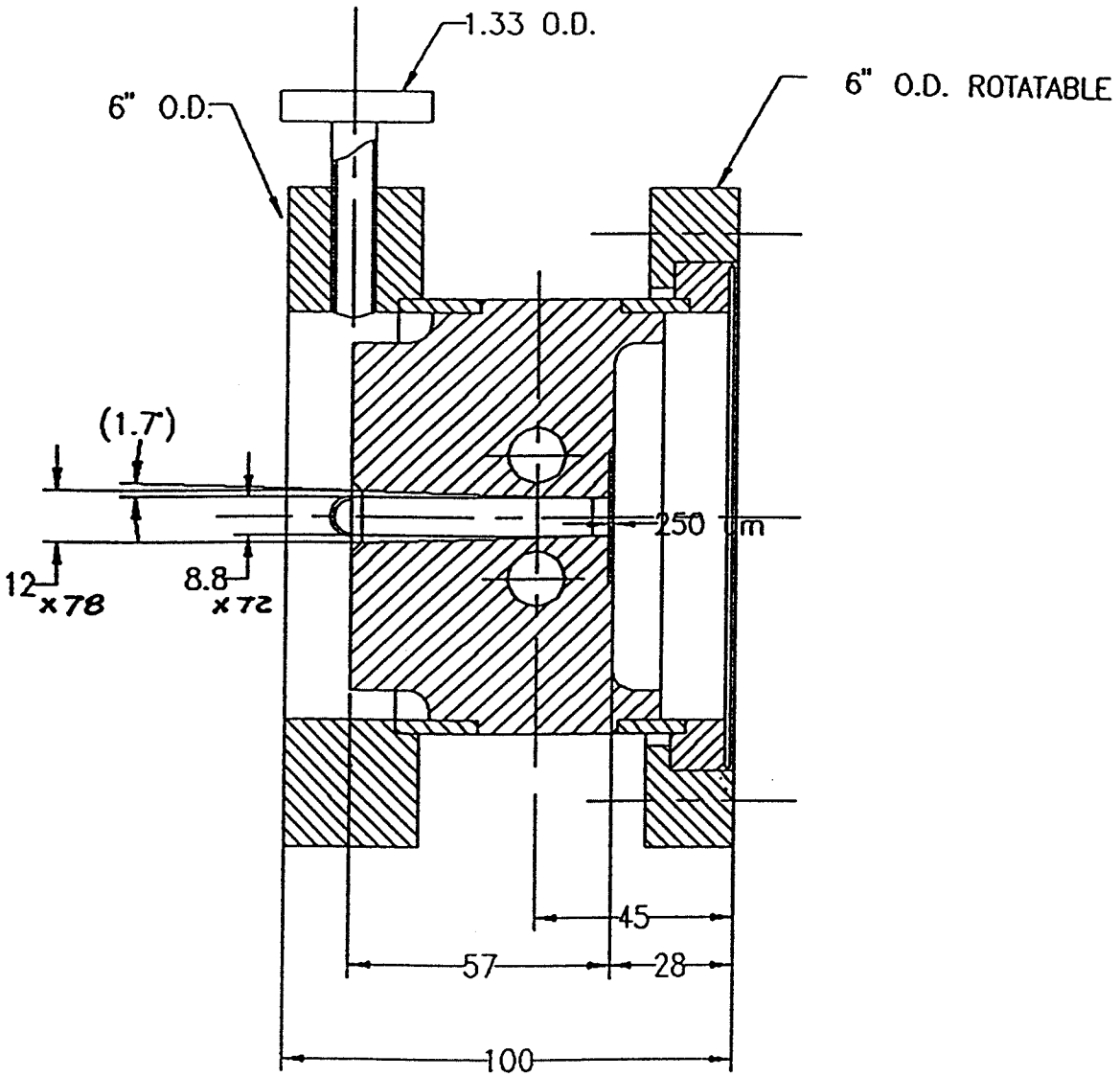

Fig. 3.5.2 Window for wiggler white beam and wiggler/undulator monochromatic beam

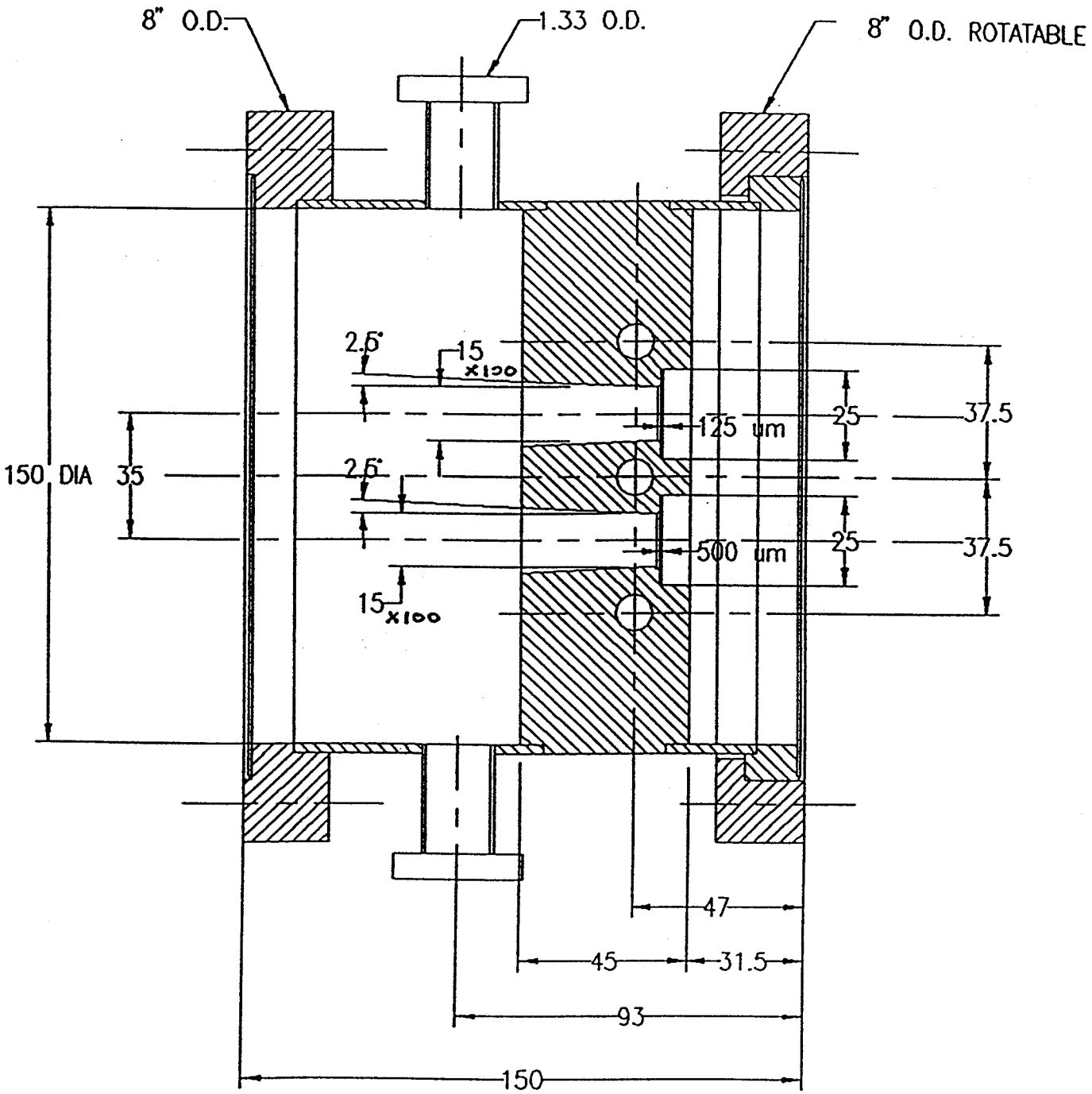

Fig. 3.5.3 Monochromatic and white beam dual window

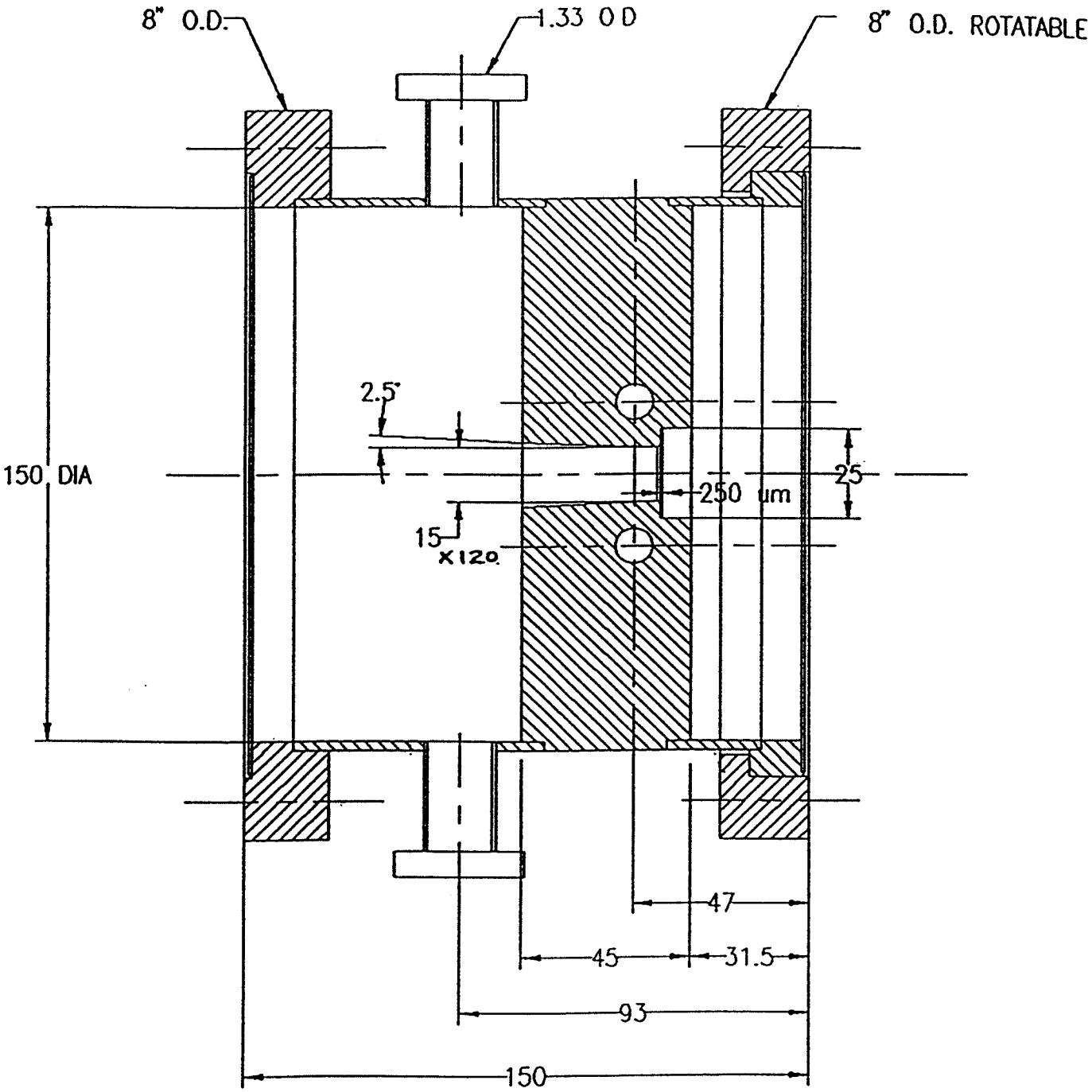

Fig. 3.5.4 Bending magnet white beam window

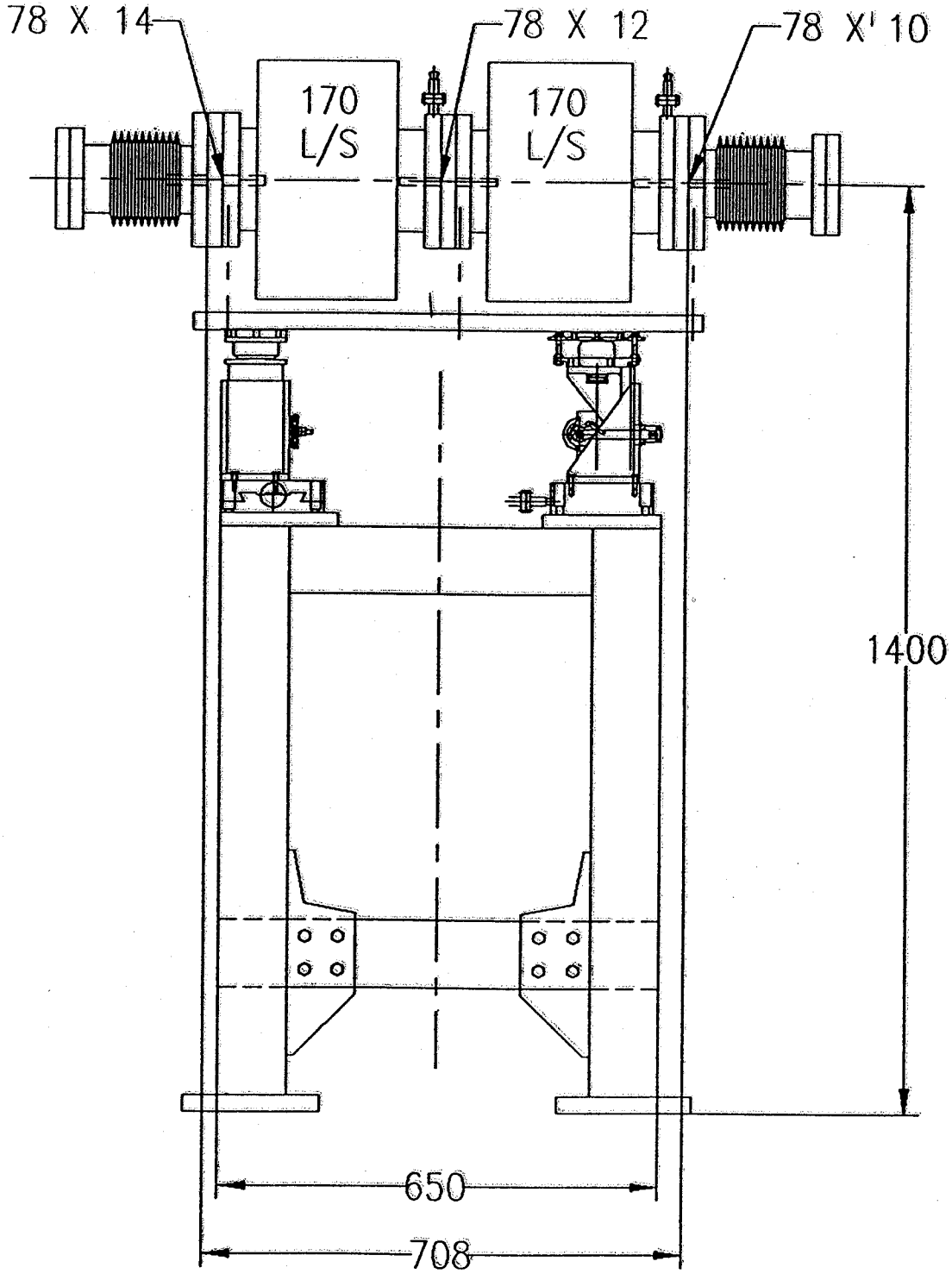

Fig. 3.5.5 Differential pump capable of supporting a windowless configuration

Water cooling is provided to the blades of the slits. The design uses an APS standard light load stepping linear actuator to provide the necessary motion.

3. An ID monochromatic beam slit provides a precise aperture for the monochromatic synchrotron radiation from IDs. This slit can also be used for monochromatic radiation from the bending magnet source. It provides a positional resolution of 1 μm and a positional reproducibility of 5 - 10 μm. The vertical aperture is 0-30 mm, and the horizontal aperture is 0-120 mm. The design uses convective air cooling to remove the heat from the slit blades.

In Figs. 3.5.6-8, the Title I designs for the above three slits are presented.

5.2.4 Beam Absorbers and Beam Stops

The white beams from IDs or bending magnet sources are stopped by a combination of photon absorbers and heavy-metal beam stops. These integral assemblies alone can completely stop the white radiation. In order to have a safe operating scheme, the absorber and the stop will be locked with a Kirk key system. The absorbers, which are made up of OFHC copper with Glid-Cop face plate, can handle a maximum power load of 5 kW. The design uses the concept that has been implemented in the beam stops designed for the ID front ends.

The monochromatic beam shutter is designed to handle monochromatic beam loads from the IDs. In this design, the heat load is conducted by a copper rod to a conventional air-cooled radiator.

In Fig. 3.5.9, the Title I design for the white and monochromatic beam stops is presented.

5.2.5 Mirror Chambers

Mirror chambers are used to provide a stable, vibration- and force-free support of beam deflecting mirrors. The chamber must allow the very precise alignment of the mirror. A resolution of the deflection angle of better than 1 μrad has to be achieved. The vacuum conditions in the chamber ($<1 \times 10^{-9}$ torr) shall avoid carbon contamination of the reflecting surface. In combination with high power ID beamlines, effective cooling must be supplied. The chamber has to allow bending of the mirror for variable focusing.

With the above requirements for mirror chambers, the following design criteria have been established. The mirror will be aligned by moving the whole chamber. The linear and rotation motions will be mechanically decoupled. The mirror support will be provided by a rigid central chamber frame. The resolution of the deflection angle of better than 1 μrad is achieved through friction-free rotational motion. The chamber movement will be decoupled from the beamline by the use of formed bellows with ± 25 mm linear movement.

The Title I design of x-ray mirror chamber is shown in Fig. 3.5.10. Such a design has successfully been used on high-power beamlines at HASYLAB in Hamburg, Germany.

5.2.6 Photon Beam Position Monitors and Supports

In the front end of each of the beamlines, white radiation position monitors will be installed. These will provide both the spatial and angular position of the photon beam. Signals from these monitors will be provided to the users of the beamline. In situations where the CAT would like to obtain independent information on the white beam delivered to the first optics enclosure, an additional monitor, similar to the that in the front end, will be provided.

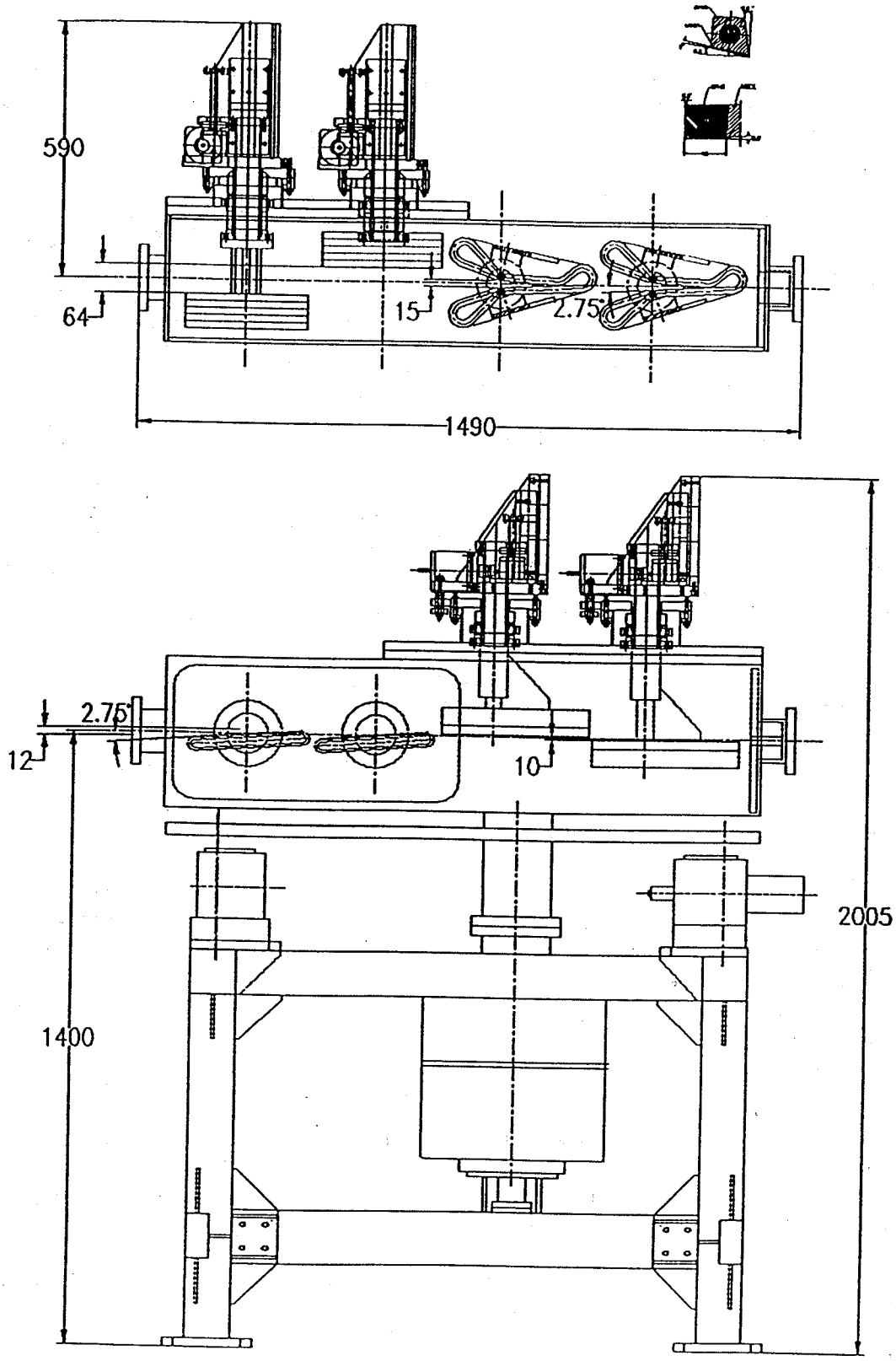

Fig. 3.5.6 ID white beam horizontal and vertical slits

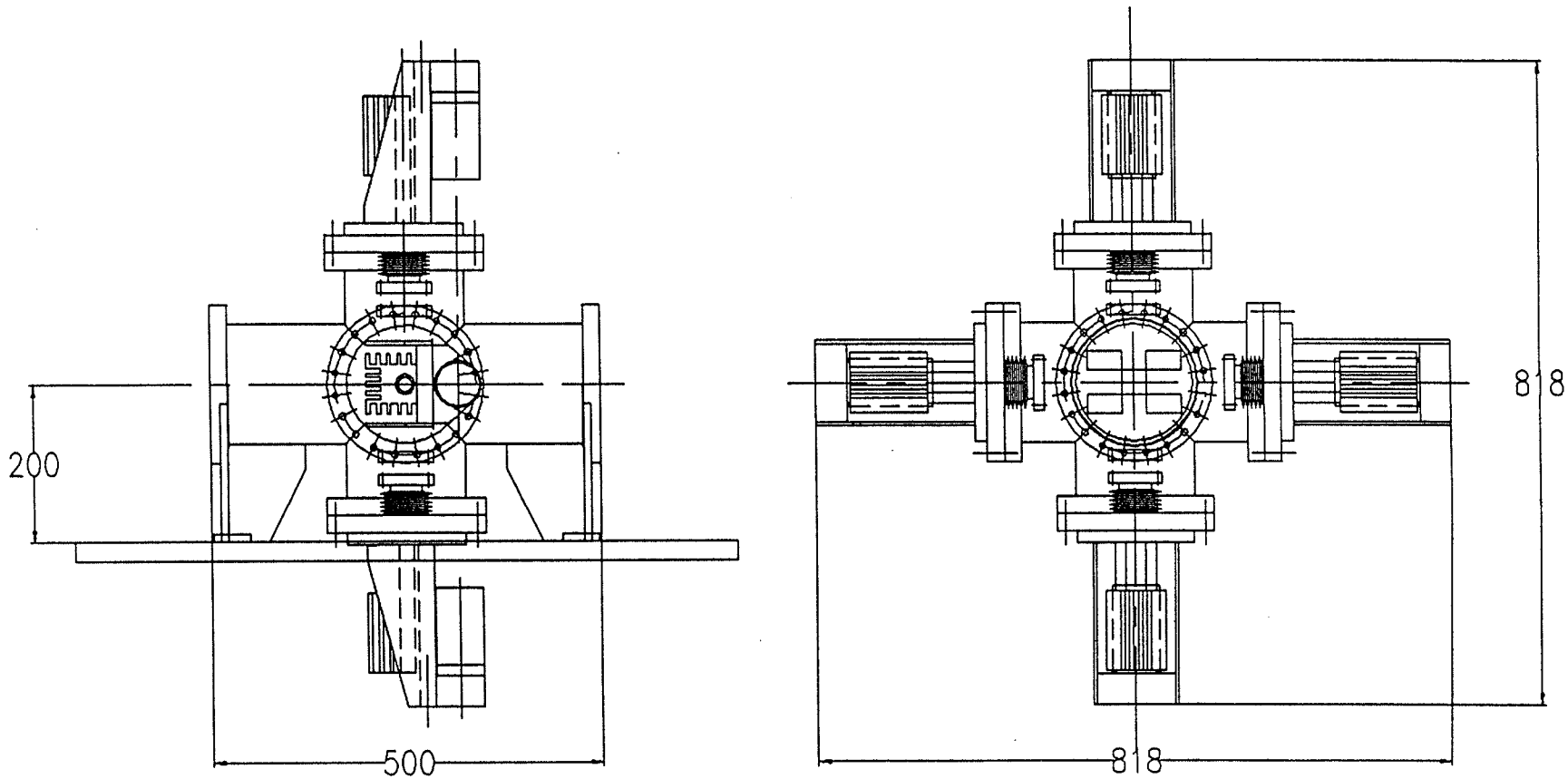

Fig. 3.5.7 BM white beam horizontal and vertical slits

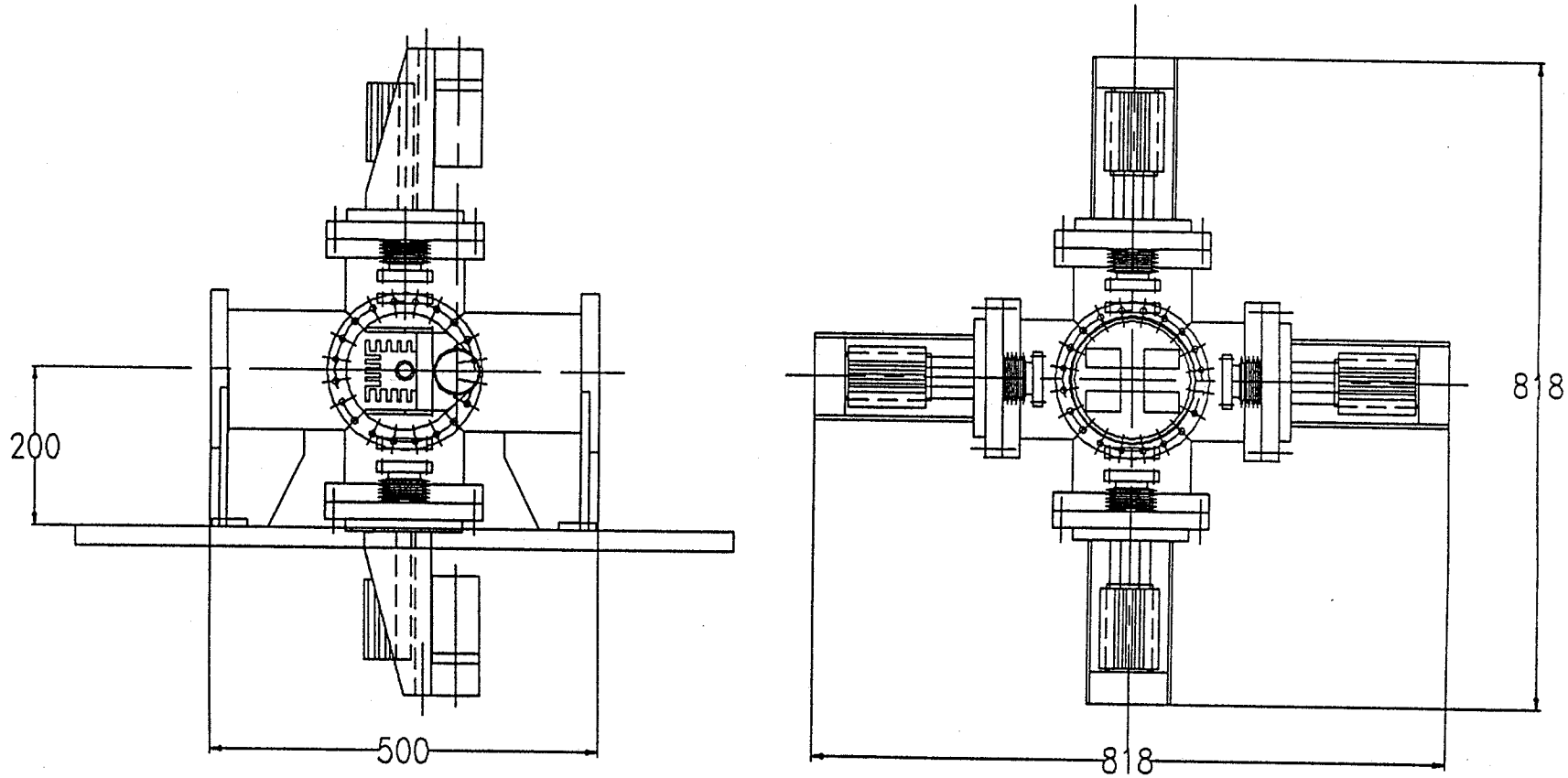

Fig. 3.5.8 ID monochromatic beam horizontal and vertical slits

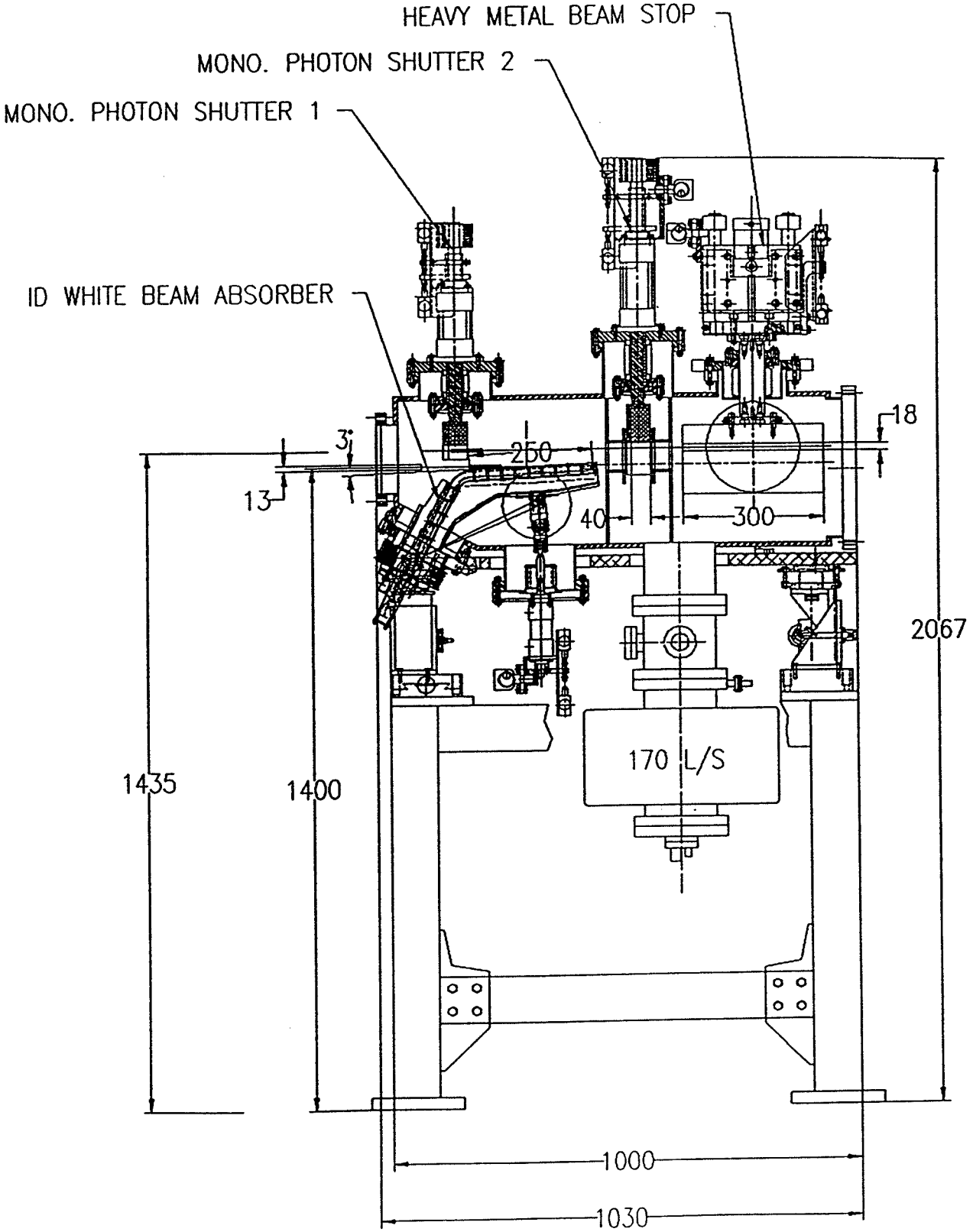

Fig. 3.5.9 White and monochromatic integral shutters and stops

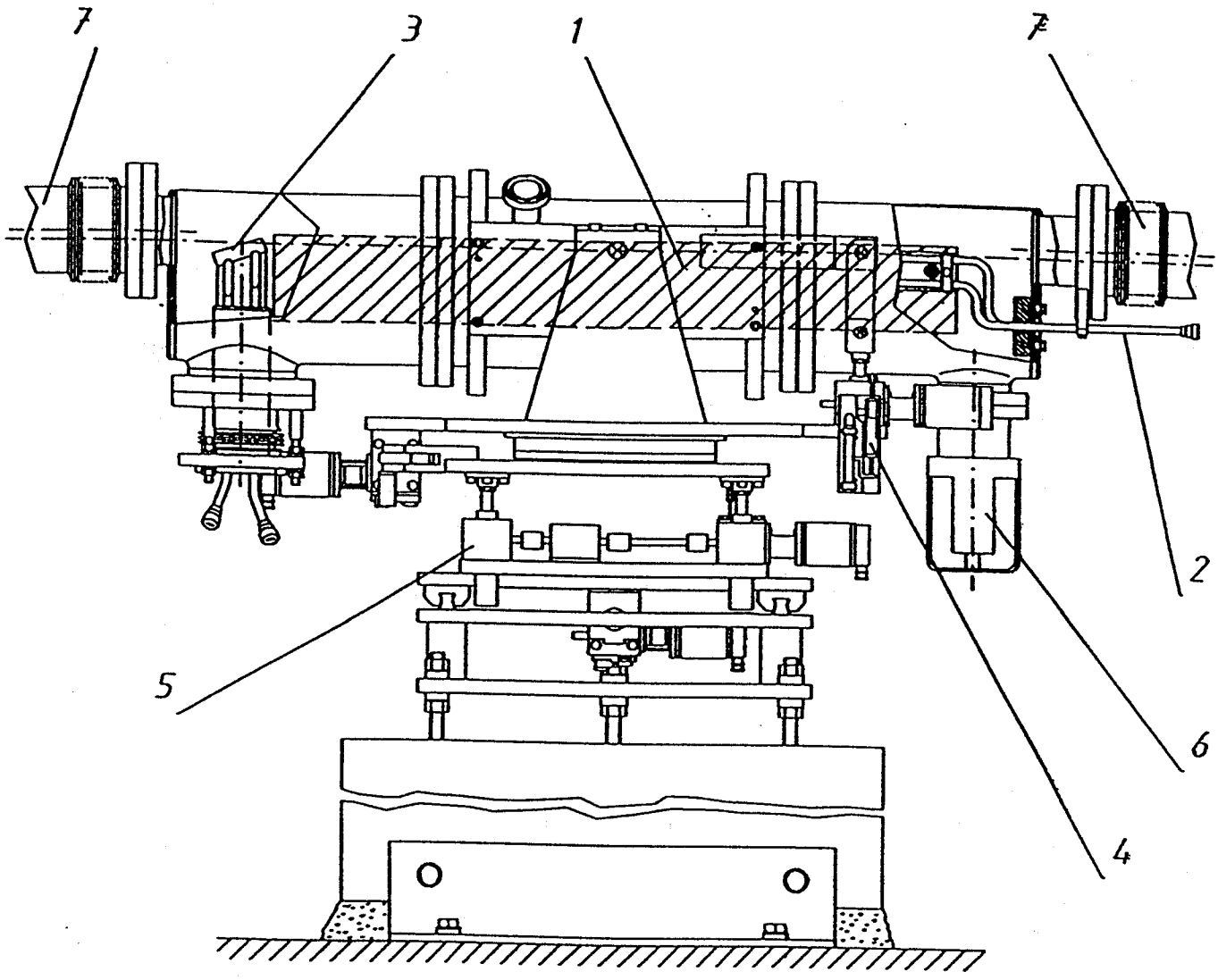

Fig. 3.5.10 X-ray mirror chamber for high power beamlines

The monochromatic beam position monitors are designed with a resolution of 0.1 - 0.5 μm. The type of monitor will be provided by the users because it will have direct implications to the scientific program. The support system however has been designed by the APS and will employ supports similar to those used in the front end with a linear resolution of 0.2 μm and angular resolution of 0.5 arcseconds.

The conceptual design for a support for the monochromatic beam position monitor has been completed and is shown in Fig. 3.5.11.

5.2.7. Stepping Motor Drivers and Controllers

Standardizing stepping motor drivers and controllers for the user applications is extremely desirable. However, because of the user proximity to such components, it is expected that some of the users will design their own systems. Here, general guidance is provided that we hope will lead to standard designs compatible to various user applications.

The capability of the standard stepping motor drivers and the controllers should be to support multiple motors (up to 100), open- and/or closed-loop control, acceleration and deceleration control, and power fail-safe control with memory backup. It would also be essential to standardize connectors and cables. The detailed specifications will be provided as activity with the CATs matures during FY 1993-94.

5.2.8 Actuators

The actuators play a major role in the design of a number of beamline components. Actuators may be needed for the white and monochromatic slits, beam stops, and safety shutters. The design work has been completed on heavy load and light load actuators coupled to a stepping motor drive or to a pneumatic drive.

In Figs. 3.5.12-15, the design for four of these actuators is given.

5.2.9 First Optics Enclosures and Experimental Stations

The first optics enclosures and the experimental stations (hutches) are designed using a modular concept to provide flexibility to the CATs. The enclosures are made of lead and steel. The lead provides the necessary radiation shielding for synchrotron radiation and bremsstrahlung. The thickness of lead shielding is now being carefully determined using detailed calculations and the experience at other synchrotron facilities.

Here, only preliminary concepts are provided. These concepts will be closely examined during FY 1993. In Figs. 3.5.16-17, Title I layouts of a first optics enclosure and an experimental station are provided.

5.2.10 Supports and Kinematic Mounts

There are many requirements for support stages and kinematic mounts in every beamline. Hence, the supports and kinematic mounts are designed with various scientific applications in mind. Some of the designs provide coarse resolution, while others provide precision movements. Some of them can accept large loads, while some are for small loads. Prototypes of some of the supports and kinematic mounts have been built to test their capabilities under extreme load conditions.

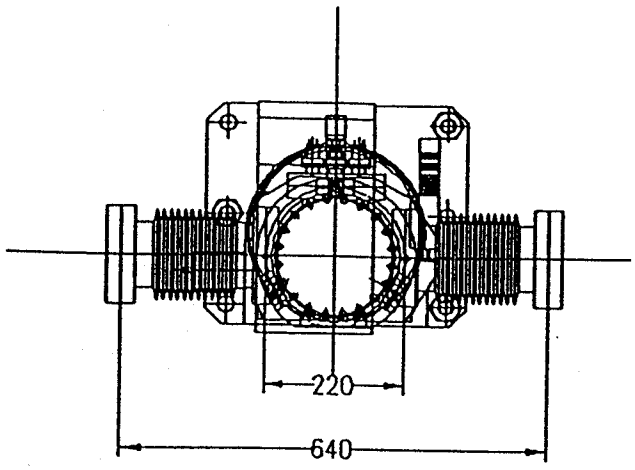

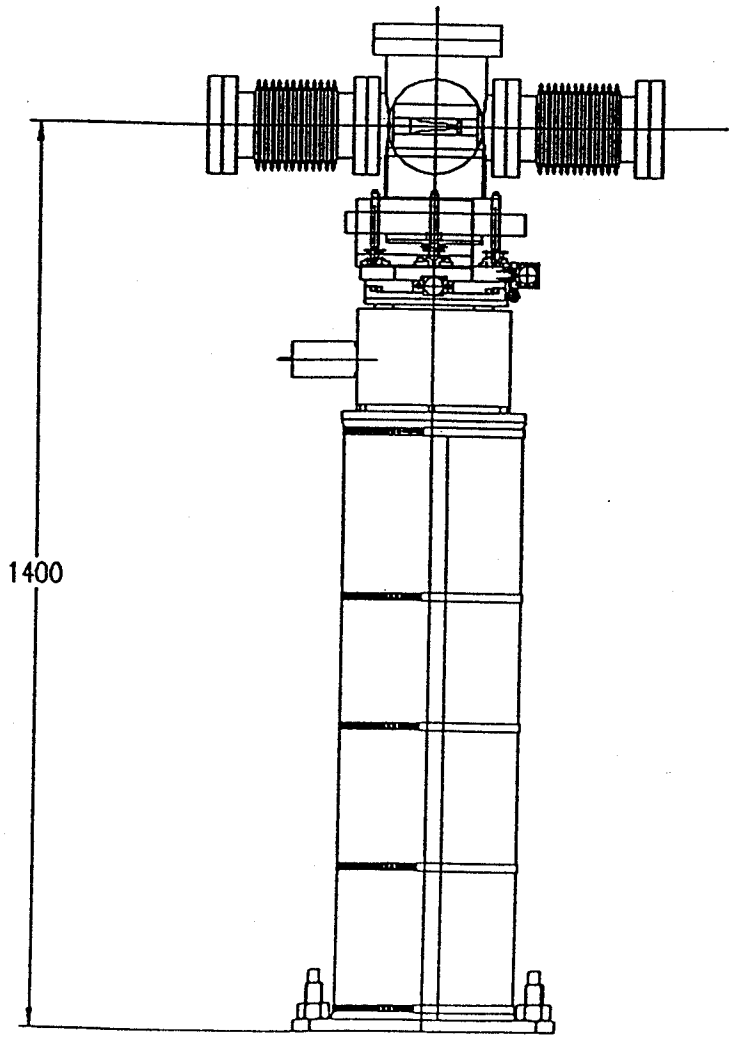

Fig. 3.5.11 Monochromatic beam position monitor support

Fig. 3.5.12 APS heavy load stepping linear actuator

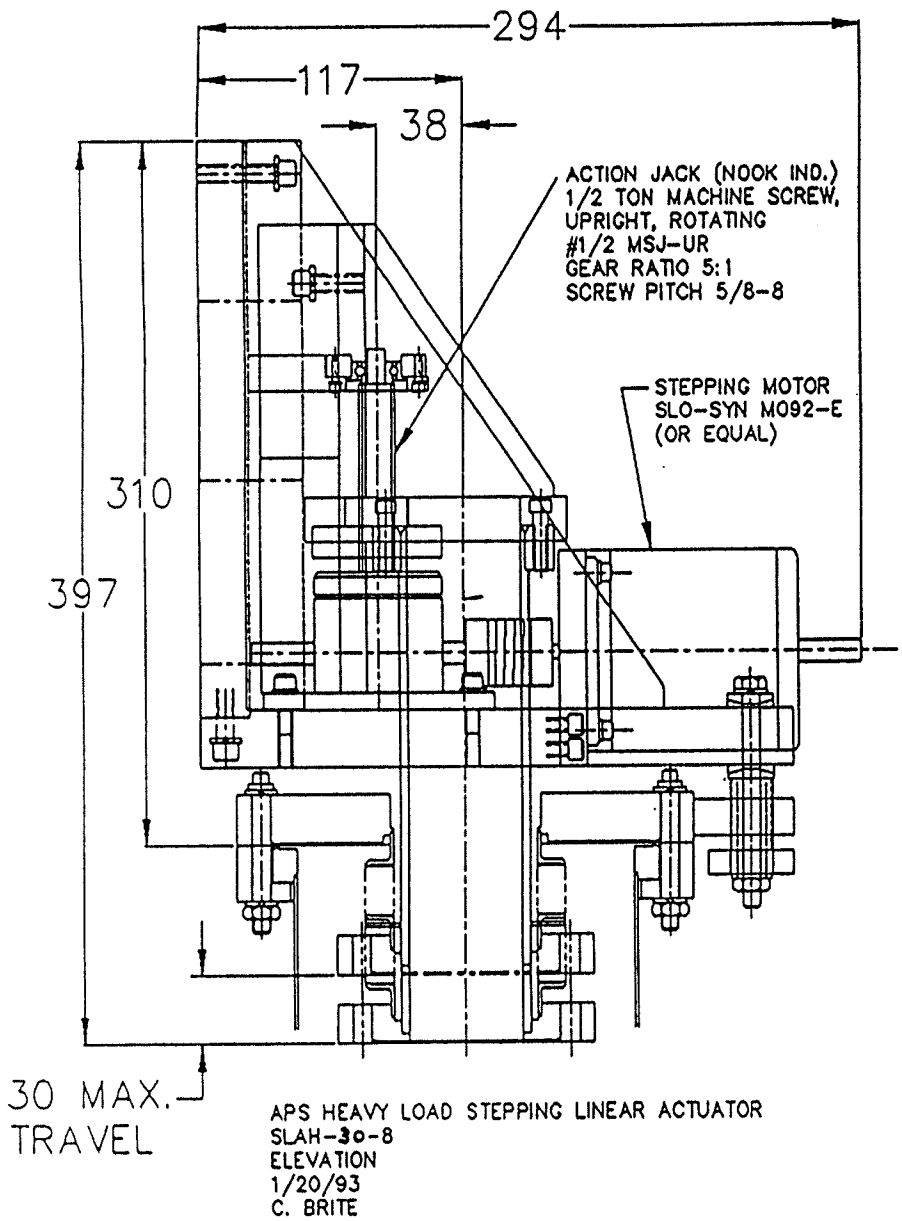

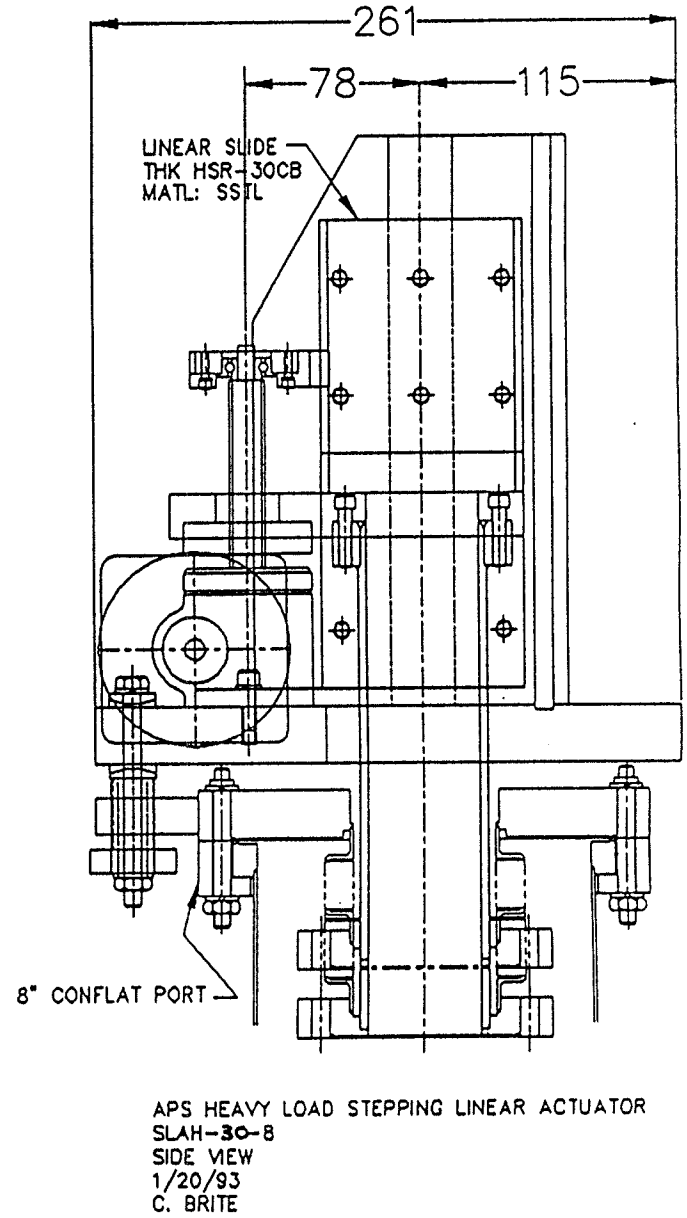

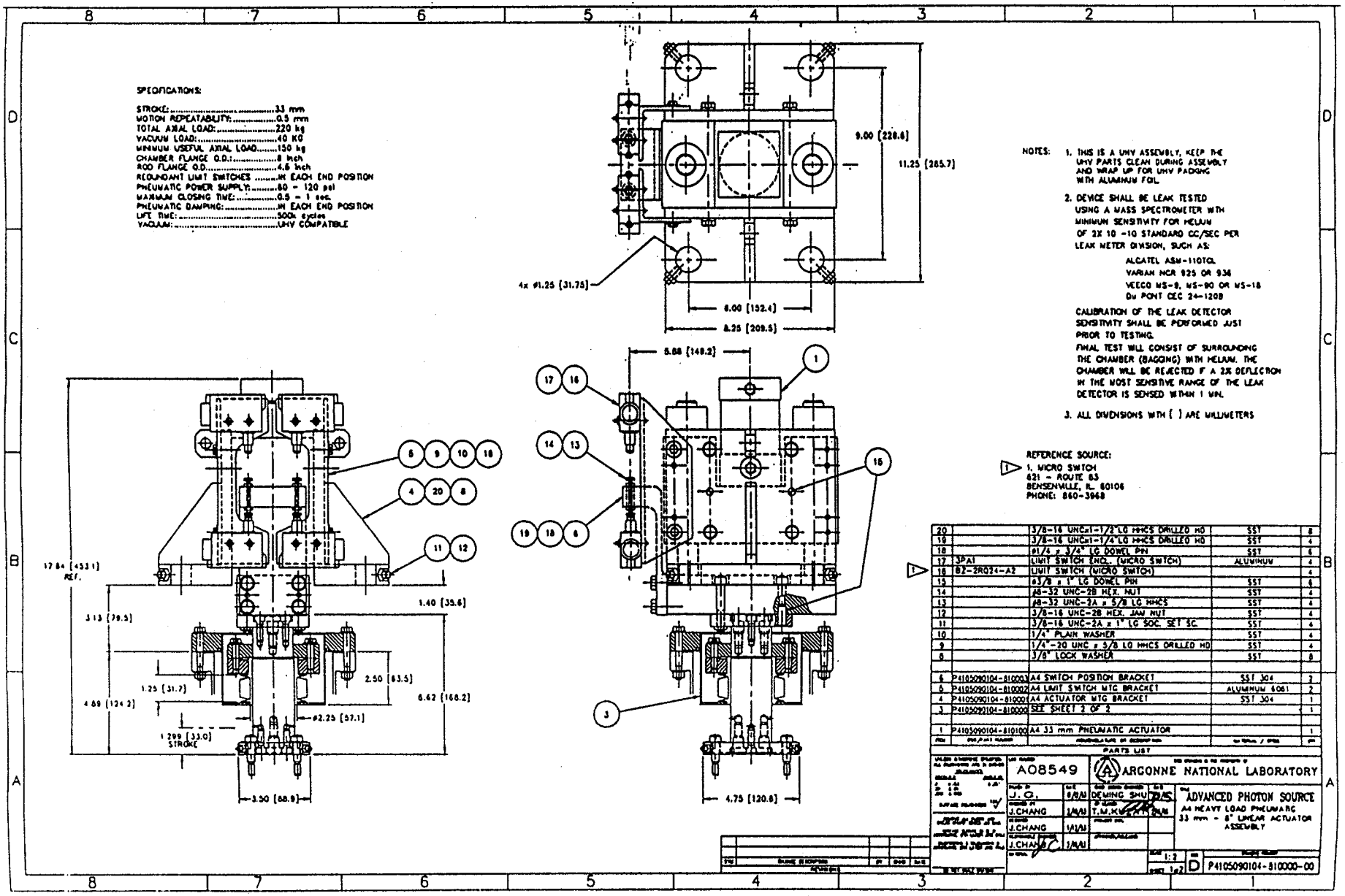

Fig. 3.5.13 APS heavy load pneumatic linear actuator

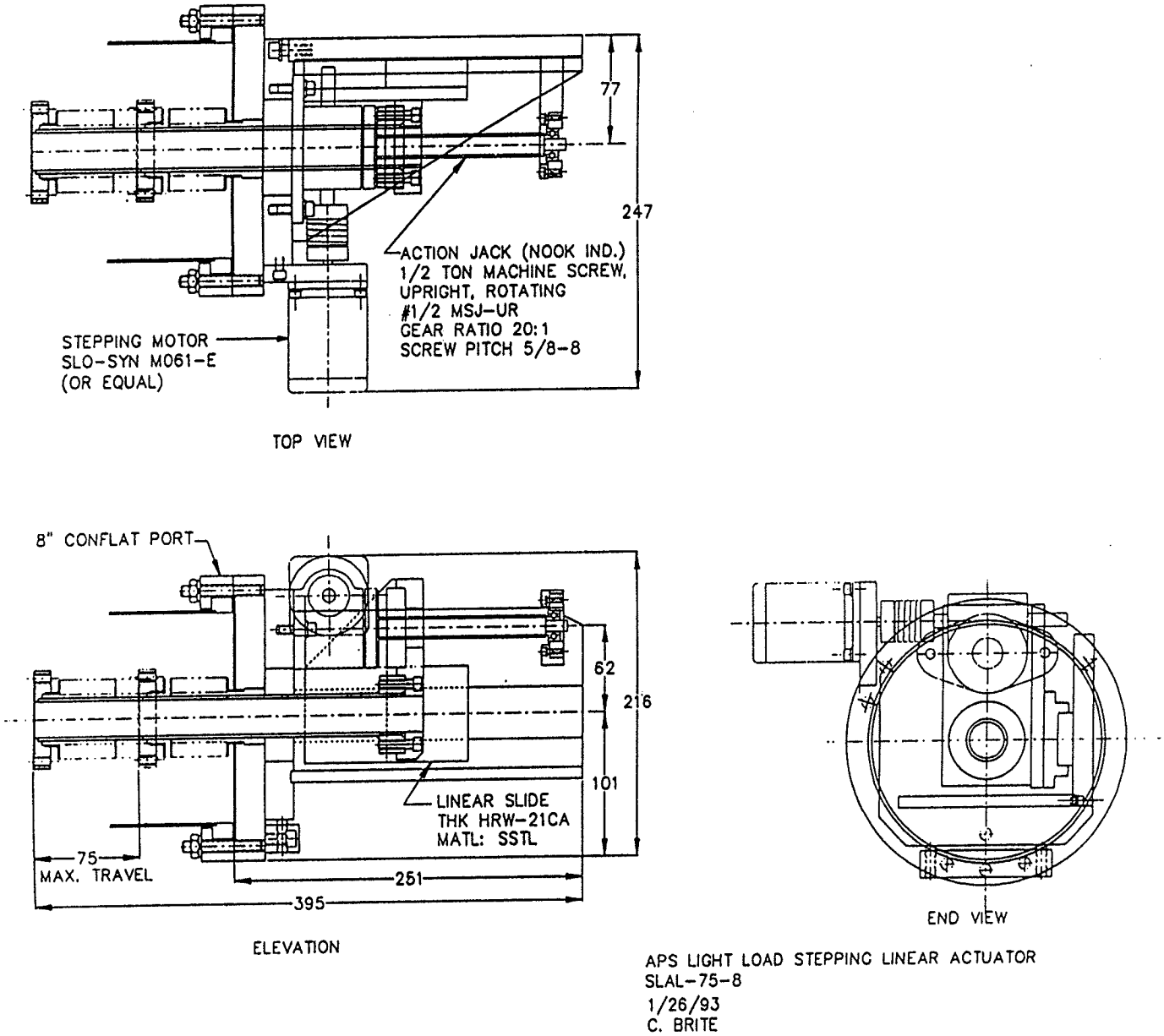

Fig. 3.5.14 APS light load stepping linear actuator

A3–81, 31mm STROKE

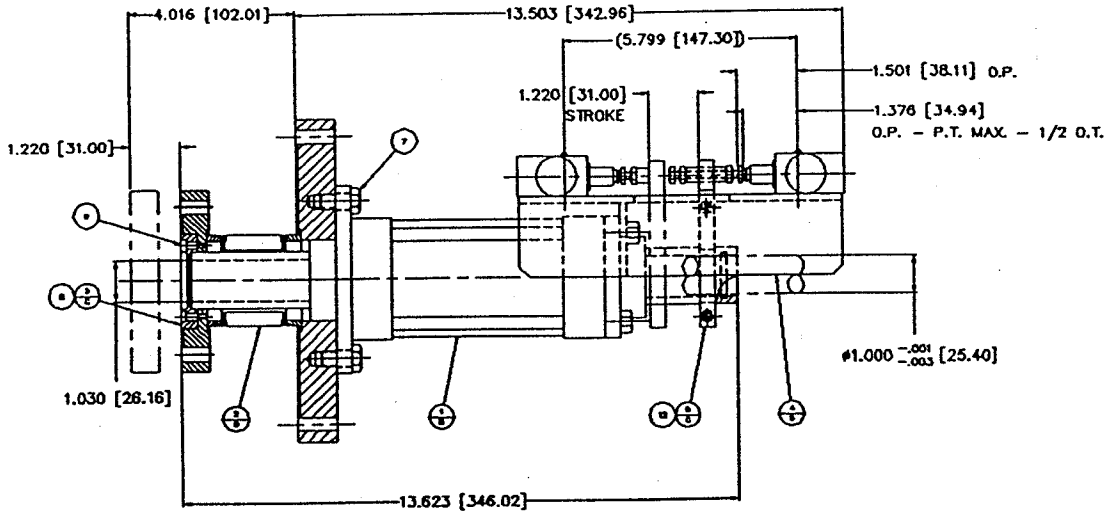

A3–83, 70 mm STROKE

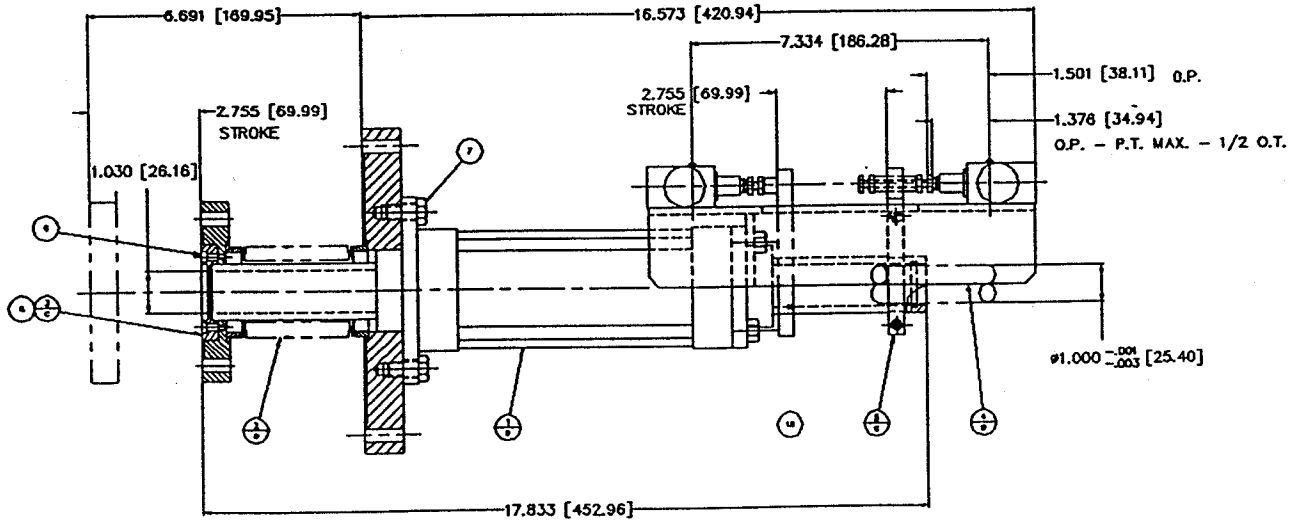

Fig. 3.5.15 APS light load pneumatic linear actuator

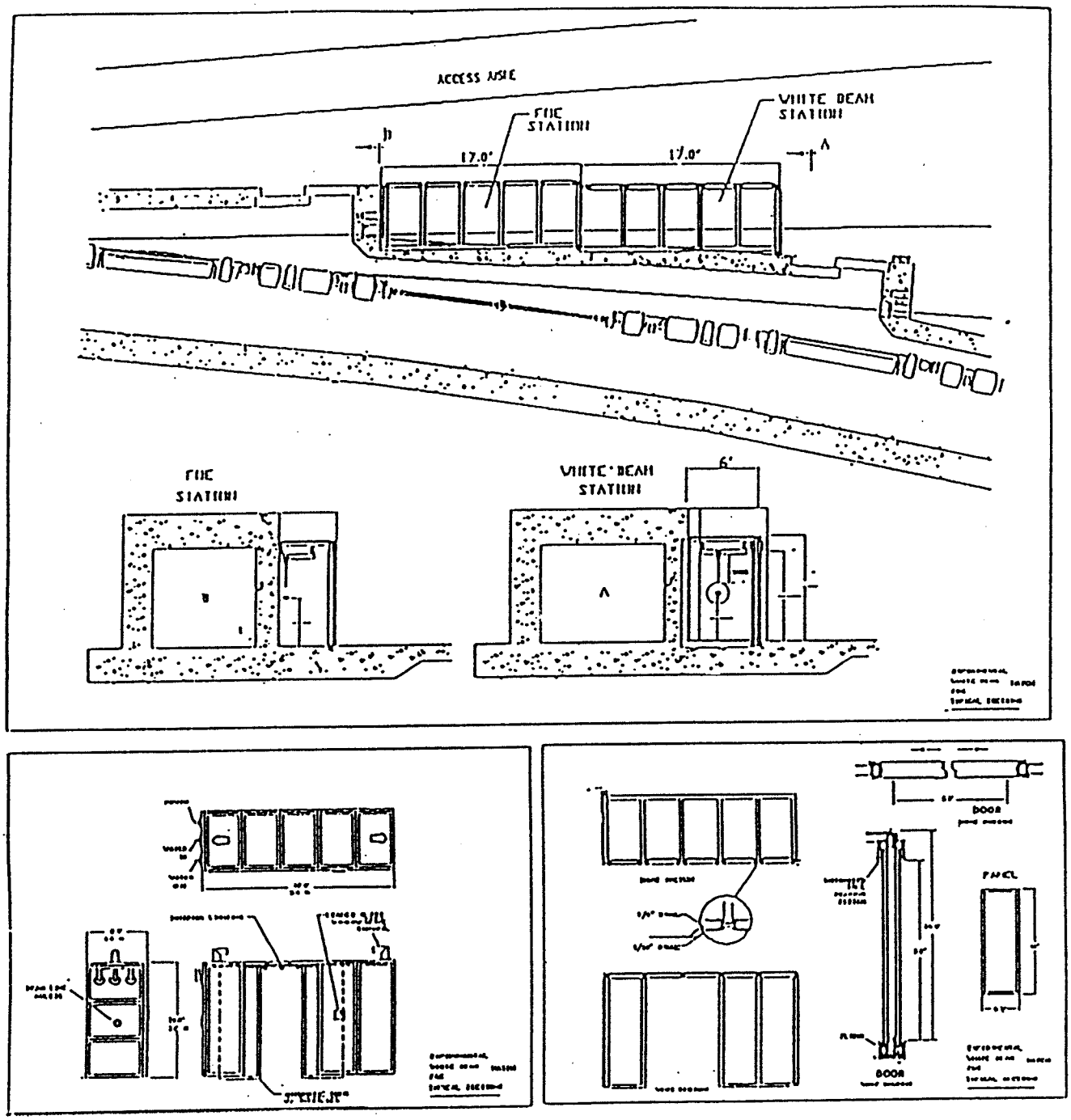

Fig. 3.5.16 First optics enclosure

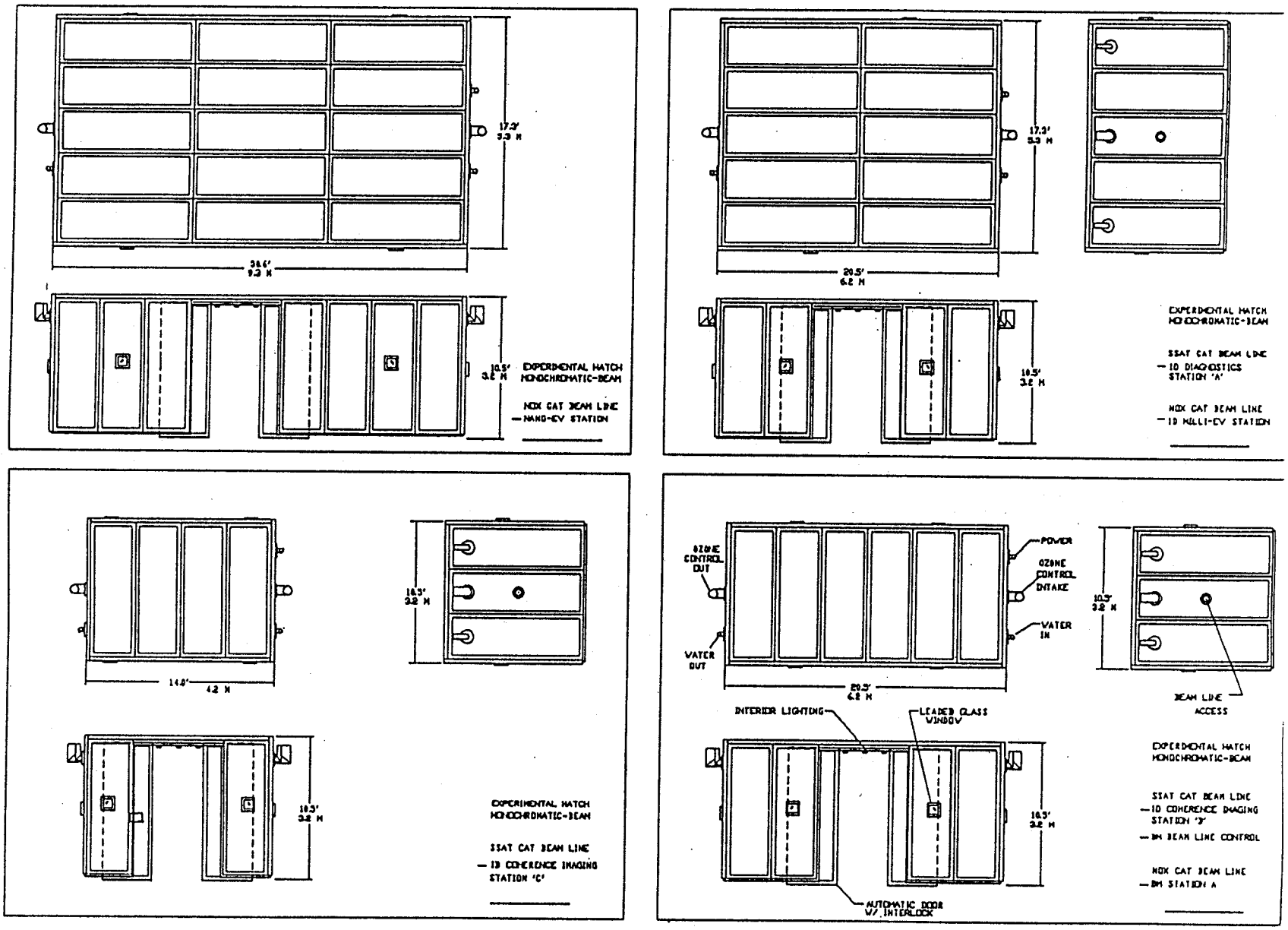

Fig. 3.5.17 Experimental station (hutch)

Only two of the concepts are presented in Figs. 3.5.18-19. These are a precision table with a 1000-Kg load capacity, a 10-μm motional resolution, and 50-μm repeatability. This table can be operated using stepping motors or manually depending on the application. The standard table has the same load capacity as the precision table, but provides only 125-μm resolution and a 400-μm repeatability. Indeed, the standard design can be built at a considerably lower price.

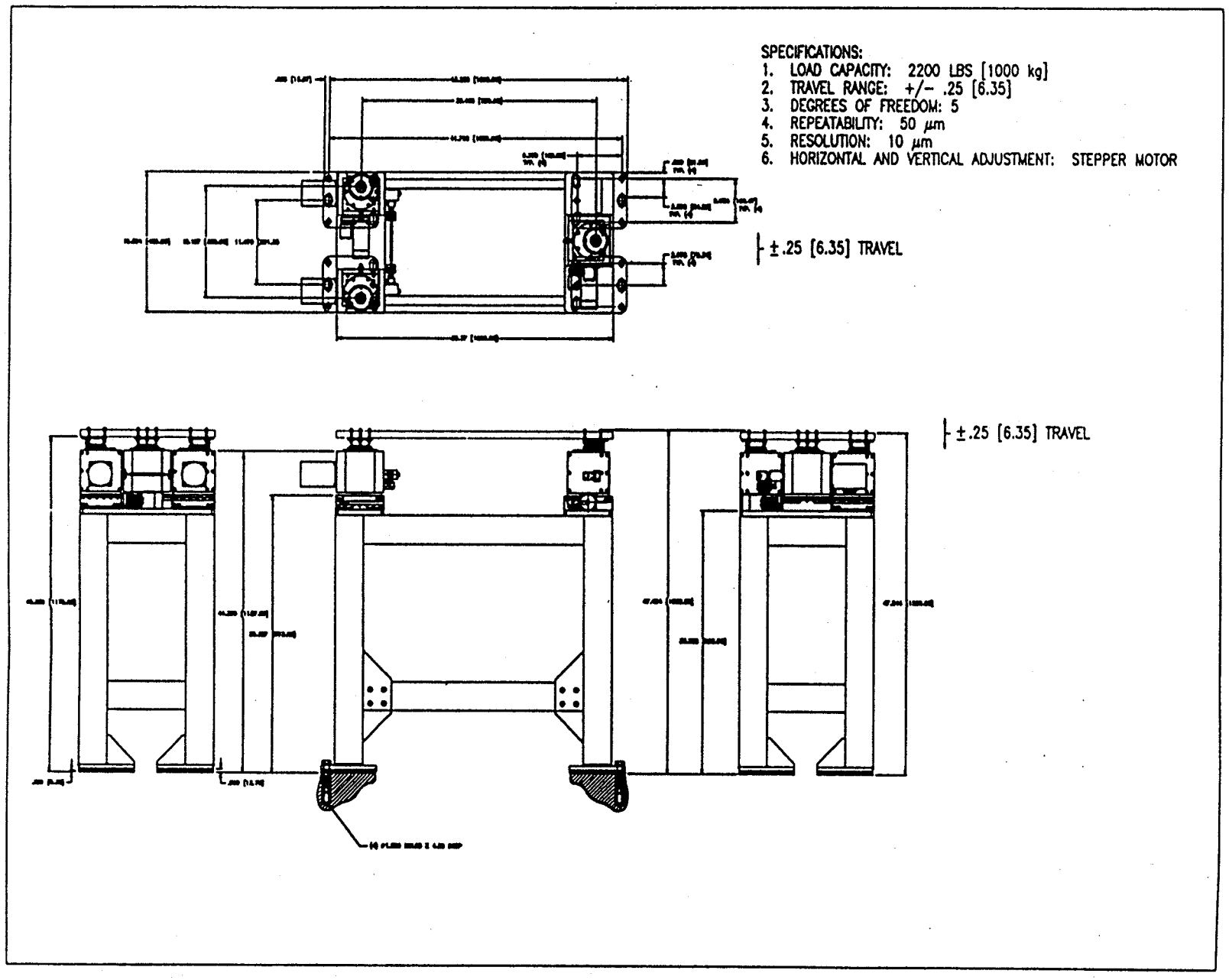

Fig. 3.5 18 Support base with precision kinematic mount stages

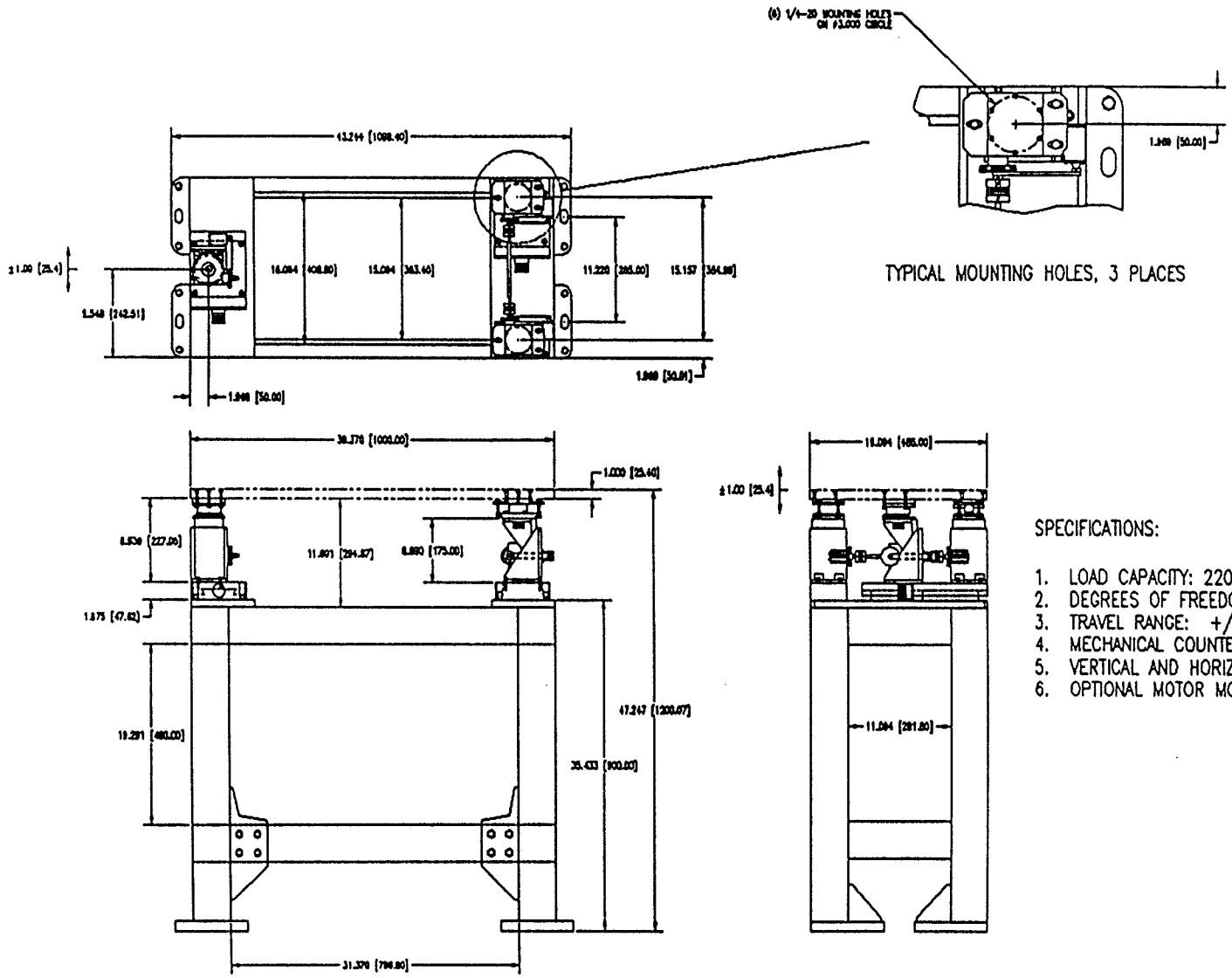

SPECIFICATIONS:

1. LOAD CAPACITY: 2200 LBS [1000 kg]
2. DEGREES OF FREEDOM 5
3. TRAVEL RANGE: +/-1° [25.4 mm]
4. MECHANICAL COUNTER RESOLUTION: .005°/COUNT
5. VERTICAL AND HORIZONTAL ADJUSTMENT: HAND KNOB
6. OPTIONAL MOTOR MOUNTS AVAILABLE

Fig. 3.5.19 Standard support base with standard kinematic mount stages

6. REFERENCES

[1] 7-GeV Advanced Photon Source Conceptual Design Report, ANL-87-15 (1987).

[2] G. K. Shenoy, P. J. Viccaro, and D. M. Mills, Characteristics of the 7-GeV Advanced Photon Source: A Guide for Users, ANL-88-9 (1988).

[3] S. L. Xu, B. Lai, and P. J. Viccaro, APS Undulator and Wiggler Sources: Monte-Carlo Simulation, ANL/APS/TB-1 (1992).

[4] G. K. Shenoy, unpublished.

[5] H. Kitamura and S. Yamamoto, *Rev. Sci. Instrum.*, to be published.

CHAPTER IV USER FACILITY BUILDINGS

1. INTRODUCTION

This section describes the buildings that support the various user facilities. All of these buildings are located outside the Experiment Hall. The structures are basically defined by the dimensional and functional requirements of the experimental programs of the users.

The four user laboratory/office modules to be constructed as part of the Beamline Initiative are identical to those being constructed in the current phase of the project. They are situated at predetermined locations and are spaced around the outer perimeter of the Experimental Hall to minimize the distance that experimenters must travel between their labs and offices and their beamlines.

During the planning of the APS construction project, the above requirements of the Beamline Initiative were anticipated. Hence, all the geotechnical evaluations were conducted as part the on-going construction.

Similarly, all the environmental compliance requirements for the entire site, which includes the Beamline Initiative, have been addressed prior to the beginning of the construction. The plans for the new initiative comply with all provisions of the National Environmental Policy Act and other related DOE orders and guidelines protecting the environment. Based on the APS Environmental Assessment (DOE/EA-0389) a Finding of No Significant Impact (FONSI) notice was established in the Federal Register, Vol. 55, No. 95 (5/16/90). The U.S. Army Corps of Engineers (COE) issued a permit for construction in wetlands in accordance with Section 404 of the Clean Water Act. As part of this permit, DOE consulted with COE on the implementation of a plan to mitigate a wetland loss of 1.8 acres total. A Flood Plains and Wetland Involvement Notice was published in the Federal Register (54FR 18326) on April 28, 1989. All construction, commissioning, and startup activities of the Beamline Initiative will be carried out in compliance with environmental permits, agreements, and DOE orders that provide the basis for the FONSI.

2. LABORATORY-OFFICE MODULES

The Lab/Office Modules (designated as Work Breakdown Structure Number 4.7.1) are one-story buildings located on the outer perimeter of Experiment Hall and are intended to provide laboratory and office space for APS beamline user groups. The interior details of the Lab/Office Modules (or LOMs) provide flexible furnishing layouts responsive to each of the user groups' specific needs.

2.1 Architecture

LOMs are single-story appendages with roof-level mechanical rooms located around the outer perimeter of the Experiment Hall. Each module, similar to that provided in the current phase of the construction project, will have a gross floor area of about 21,000 square feet. Each LOM is composed of eight laboratories that connect directly to the Experiment Hall, space for approximately 32 offices for the experimenters, meeting rooms, and support activities. Each module is served by a truck air lock.

Around the perimeter of the Experiment Hall, space has been provided for the construction of eight LOMs as shown in Fig. 4.2.1. Four LOMs are to be built in the current phase, and the remaining four are proposed to be built to support the Beamline Initiative. These four new LOMs are planned in anticipation of utilization of instrumentation proposed for the user beamlines

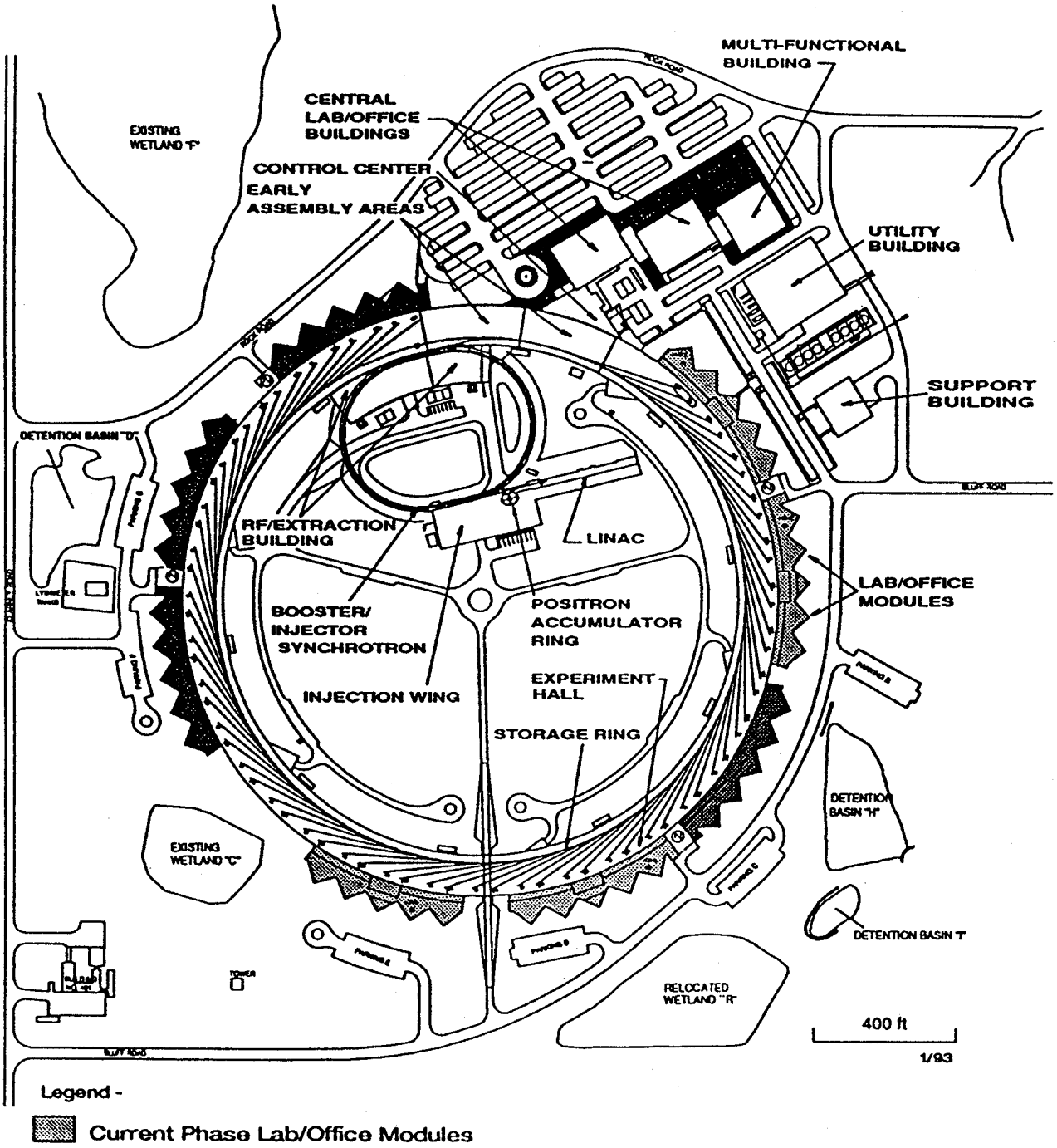

Fig. 4.2.1 Layout of the APS facilities showing the location of the Laboratory-Office Modules in current construction phase and the Beamline Initiative

operating in the new initiative. The LOMs being built in current phase are buildings 431, 432, 434, and 435. In the Beamline Initiative, buildings 433, 436, 437, and 438 will be completed.

The interior of each module is organized by a longitudinal corridor that provides access to laboratories, offices, common facilities, and controlled entry points. Entry to the module is from the adjacent parking areas, which are already developed as part of the current construction. The LOMs can also be entered from the interior of the Experiment Hall. Emergency exits are provided at several locations around the building.

2.2 Operational and Functional Needs

The LOMs provide offices, laboratories (chemical and electronic), and common facilities for researchers working with the beamlines in the immediate vicinity. The common facilities located in the middle of the module provide shop space, toilet/locker rooms, a kitchen and break area, a meeting room, two rooms for APS and ESH staff, a secure room for electronic communication bridges, and a controlled access entry point. These facilities are conveniently located with respect to offices, laboratories, and the Experiment Hall. The office spaces will be located along the exterior walls, and the laboratories will be adjacent to the Experiment Hall in each module. At one end of each LOM, a floor-level truck air lock will be located. Additional space for the storage of liquid nitrogen and bottled gases is provided adjacent to the truck air lock.

2.3 Structural Systems

Design loads that have been planned for the structural design of the LOMs include dead loads, snow loads, live loads, wind loads, and seismic loads.

The structural system will consist of a steel beam, girder, and columns system supporting a steel-deck roof. Foundations will be conventional spread footings at building column locations with drilled cast-in-place concrete caissons and/or continuous footings beneath the exterior walls. The floor will be reinforced concrete slab-on-grade over compacted granular fill.

The subsurface geology at the locations of the LOMs proposed in the new initiative has already been evaluated during the APS site subsurface exploration and geotechnical engineering.

2.4 Heating, Ventilating, and Air Conditioning

The office and laboratory areas of each module will be maintained at a space temperature of 75°F ± 2°F year-round by a single variable-volume air-conditioning unit with return and exhaust fans located in the mechanical equipment room of each module. Each air-handling unit will consist of a low-pressure hot water, chilled water coil, filter, and economizer cycle.

Hot water will be delivered to the mechanical equipment room from existing headers in the Experiment Hall. Chilled water will be supplied from a connection to the utility loop in the Experiment Hall. A direct digital controller (DDC) in each module will control the heating, ventilating, and air-conditioning equipment.

2.5 Plumbing, Process Piping, and Fire Protection

Plumbing systems planned for the LOMs consist of plumbing fixtures, electric water heating equipment, domestic cold and hot water distribution, sanitary and laboratory waste water collection, and vent piping systems in accordance with ANL requirements.

Process piping systems for laboratory cold and domestic cold and hot water as well as compressed air will be provided.

A pad and piping will be provided for a vertical liquid nitrogen tank alongside each LOM.

Domestic cold water enters the building from the outside. Laboratory water and compressed air will be provided from the Experiment Hall.

A smoke control system utilizing the supply and return air fans will be provided. A wet-pipe automatic sprinkler system will be installed throughout. Hand-operated 15-pound carbon dioxide and 2.5-gallon pressurized water fire extinguishers will be located in accordance with NFPA requirements.

2.6 Electric Power

Electric power is supplied to each of the LOMs from an adjacent substation serving the Experiment Hall. The building distribution is 480/277 volt, three phase, four-wire. Dry type transformers provide 480 volt to 208/120 volt power. Lighting in the laboratories and offices consists of recessed fluorescent fixtures. Lighting in the shops, electric room, and other common areas will consist of fluorescent fixtures, pendant-mounted.

A central energy management and control system (EMCS) will be provided. Emergency power is provided from standby diesel generator sets. Direct digital controllers (DDCs), a video terminal, and several events printers will be located in selected APS areas and will be connected to the existing energy management control system (EMCS).

All areas will be monitored by a conventional heat and smoke detection system connected to many zoned fire alarm control panels located in the APS buildings. The systems will be enunciated in the ANL fire station and the APS control center via dedicated telephone lines.

Telephone, paging, and electronic communication systems are provided. The electronic communication system will be run in conduit and cable trays shared with the telephone system. A central surveillance system will also be provided.

CHAPTER V COST AND SCHEDULE

1. INTRODUCTION TO COST AND SCHEDULE

All costs for the Beamline Initiative are developed from the Work Breakdown Structure (WBS) and are expressed in FY 1992 dollars. The WBS encompasses all elements of the construction phase from the design to the end of construction. The experimental facilities technical components were designed by the staff of the APS Experimental Facilities Division (XFD), who also estimated their costs. The Conventional Facility designs were developed by APS staff and the architect/engineering firm of Lester B. Knight, while the cost estimates were developed by the construction contractor, Rust Engineering, and the APS staff. The costs of Laboratory-Office Modules are based on actual bids obtained during the current phase of construction. A complete planned WBS is shown in Table 5.1.1. The WBS shows the Beamline Initiative at level 1. Level 2 shows the functional responsibility that includes the experimental and conventional facilities. Also included at this level are project management overheads and contingency. The technical components of the experimental facilities are defined at WBS level 3 (e.g., 4.4.1). All costs of materials, construction, and inspection (I) are estimated at an appropriate WBS level and rolled up to develop the final costs at WBS level 2. The costs of Engineering and Design (ED) are not included here because the design and engineering work is already completed as part of the current construction phase.

The cost estimates include all costs for PACE construction to be incurred after the Beamline Initiative approval. The scope of this initiative includes construction of equipment behind the shield wall for four additional sectors, the standard components of the beamlines, and four lab-office modules for the users.

It should be pointed out that the standard components of beamlines have been described as examples in Chapter III. In selecting the final standard components to be provided to various CAT beamlines for the Beamline Initiative, these examples as well as other ideas from the user community will be used. Typical costs for each of these standard components have been estimated. The list and the number of these components that will be built as part of this initiative will be developed after the Title I designs of the ÇAT beamlines are reviewed by the APS.

The costs for R&D in support of construction, operations, and for commissioning the experimental facilities are also included in this cost estimate.

The time estimated for the conventional facilities engineering, design, and construction is based on the experience gained in these activities during the on-going phase of the Project. It is estimated that development of the Beamline Initiative technical components will start with the generic-type insertion devices and front ends at the same time as the technology for these devices is being developed in the current phase.

Table 5.1.1

APS Beamline Initiative Work Breakdown Structure

WBS Code	Element Description
X.4.0	APS Beamline Initiative
X.4.1	Project Management (Beamline Initiative)
X.4.4	Experimental Facilities
X.4.4.1	Experimental Facilities Technical Components
X.4.4.1.1	Insertion Devices (4)
X.4.4.1.2	Beamline Front Ends (8)
X.4.4.1.5	Standard Components of Beamlines
X.4.7	Conventional Facilities
X.4.7.1	Lab Office Modules (4)

2. COST ESTIMATES

The direct cost elements such as labor, materials and services, direct material, and subcontracts are broken down into various craft codes. These have been listed in Table 5.2.1. The rates used for the various crafts are given in Table 5.2.2 as hourly rates in FY 1992 dollars.

The work in each element of the WBS is divided into eight activities: design, procurement, fabrication, assembly, testing, installing, checkout, and Level of Effort (LOE). The last activity, namely LOE, is the administrative effort involved in performing the work and does not have a true final product.

All the overhead and paid-absence costs for the construction activity are included separately along with the rest of the APS construction project. However, in deriving the man-year numbers, the paid-absence fraction is included.

A cost breakdown by WBS code for the Beamline Initiative is shown in Table 5.2.3 in FY 1992 dollars. The cost estimates for the conventional facilities include two elements: 1) construction costs. and (2) the inspection cost.

All cost estimates for the experimental facilities technical components include three basic elements: 1) costs of hardware deliverable (materials), 2) construction costs, and 3) inspection costs. These elements are given in detail in Section 4.

Table 5.2.1

Cost Account Planning - Direct Cost Elements

Labor Classifications - APS

101 - Staff (Physicist, Engineer, Computer Designer, Project Management)
111 - Salaried (Chief Technician, Ex. Secretary, Admin. Asst.)
121 - Hourly (Technician T1/T2, Drafter, Sec./Clerk, Non-Union)
131 - Hourly (Union Standard Rate)
141 - Temporary (Post. Doc.)
161 - Temporary (Hourly)
505 - Special Term Appointees (STA)

M&S - Material & Services

400 - Travel & Living
430 - Educational Reimbursements
416 - Seminars, Conferences
422 - Scientific Equipment Maintenance
427 - Computer Software
405 - Equipment Rental
499 - Miscellaneous ODC

ANL Service Centers

521 - ANL Central Shops
571 - ANL Electronics Division
561 - ANL Graphics Arts Services
550 - ANL Computer Services Division
520 - ANL Engineering Division
590 - ANL - All Other Support

Direct Material

390 - Material purchased through APS Procurement Cell
390 - Freight and transportation related costs for materials
390 - Stock issues from ANL stores
390 - Purchase orders initiated by ANL shops

Subcontracts

402 - Personal service subcontracts w/individuals
403 - Personal service subcontracts - all others
404 - Non-personal service subcontracts (equipment leases)
407 - Construction Management subcontracts
408 - A/E subcontracts
410 - Outside shopwork and installation costs

Table 5.2.2

Craft Codes and Hourly Rates (FY 92$)

Engineering, Design and Inspection (ED&I):*		
101-PH	-Physicist	$33.40
101-EN	-Engineer Mechanical and Electrical	$33.40
101-SW	-Computer Designer (Software)	$33.40
101-DC	-Designer/Design Coordinator	$33.40
121-DR	-Drafter	$17.46
141-	-Postdoc	$16.72
Construction:		
Assembly and Test:**		
121-T1	-Technician, relatively unskilled	$17.46
121-T2	-Technician, experienced/skilled	$17.46
Fabrication/Manufacturing:		
521-	-ANL Fabrication/Manufacturing Support	$51.80
Installation Subcontracts ("Davis-Bacon"):**		
410-IP	-Plumber,Steam Fitter Sheet Metal	$45.00
410-IE	-Electrician	$45.00
410-IC	-Carpenter	$45.00
410-IT	-Technician	$45.00
Level of Effort (LOE):		
101-MN	-Project Manager	$33.40
121-SS	-Secretarial Support	$18.33
101-EN	-Project Engineer	$33.40

* Includes effective hourly base pay and benefits, but does not include lab overheads.

** Includes hourly base pay, benefits, and overheads, and profit for "outside" vendor or contractor.

Table 5.2.3

APS BEAMLINE INITIATIVE COST BREAKDOWN BY WBS CODE

WBS Code	Description	Cost in FY 92 M$	
4.0	APS Instrumentation Initiative		
4.1	Project Management (2% of Construction Cost)		**0.95**
4.4	Experimental Facilities		**36.40**
4.4.1	Experimental Facilities Technical Components	36.4	
4.1.1.1	Insertion Devices	4.3	
4.4.1.2	Beamline Front Ends	6	
4.4.1.5	Standard Components of Beamlines	26.1	
4.7	Conventional Facilities		**11.01**
4.7.1	User Lab-Office Modules (4)	11.01	
	Contingency (10.5% of Construction Cost)		5.07
	Overheads (5%)		2.67
	Total Estimated Cost (TEC)		**56.10**
	R&D in Support of Construction		2.66
	Other Project Costs		4.97
	Capital Equipment		10.11
	Inventories		0.86
	Total Project Cost (TPC)		**74.70**

3. TIME SCHEDULE

The schedule is based on the assumption that the conventional facilities have to be completed in time for current phase operations to support users of the facility. Therefore, the schedule allows for some overlap between the two phases for continuity and efficiency. The experimental facilities technical components will be using existing facilities from the current phase. Therefore, there will be no conflict of schedule. The design, construction, and installation time schedule is based on experience of personnel at APS and other laboratories as well as vendor quotations. The installation of the technical components behind the shield wall is scheduled to coincide with the shutdown and maintenance schedule during operations.

Figure 5.3.1 shows the time schedule estimated for both the conventional and the experimental facilities.

4. COST SCHEDULE

Using the detailed WBS cost estimate in Table 5.2.3, which contains the cost of materials and labor of various crafts, and the time schedule shown in Figure 5.3.1 developed for completion of these activities, a cost schedule profile has been generated and is shown in Table 5.4.1 and Figure 5.4.1. In addition to the cost elements previously mentioned for both the conventional and experimental facilities, included in this profile are: 1) laboratory overheads estimated at 5% of construction costs for indirect expenses (such as procurement, accounting, human resources, etc.) and maintenance of facilities, 2) contingency costs estimated at 10.5% of construction cost, because the cost of the specialized insertion devices, front ends, and the standard components of the beamlines may vary.

Applying the escalation rates given in Table 5.4.2, the escalated cost schedule profile shown in Table 5.4.3 was generated and is graphically presented in Figure 5.4.2.

The budget BA/BO profile (Budget Authorization/Budget Obligated) for the construction project is broken down by fiscal year and is shown in Table 5.4.4 and Figure 5.4.3.

APS BEAMLINE INITIATIVE CONSTRUCTION TIME SCHEDULE

WBS ELEMENT	FY 1995	FY 1996	FY 1997	FY 1998
4.7 Conventional Facilities				
4.4.1.1 Insertion Devices				
4.4.1.2 Beamline Front Ends				
4.4.1.5 Beamline Standard Components				

Figure 5.3.1

Table 5.4.1

APS BEAMLINE INITIATIVE COST SCHEDULE
(FY92 M $)

WBS NUMBER	ITEM	1995	1996	1997	1998	Total
4.1	Project Management(2%)	0.05	0.52	0.22	0.17	0.95
4.4	Experimental Facilities	2.31	15.02	10.76	8.31	36.40
	ED & I (7.9%)	0.17	1.10	0.79	0.61	2.67
	Construction Effort	0.31	2.11	1.62	1.28	5.32
	Materials	1.83	11.80	8.35	6.42	28.41
4.7	Conventional Facilities		11.01			11.01
	Construction Management (2.89%)		0.31			0.31
	ED & I		0.78			0.78
	Construction		9.92			9.92
	Subtotal	**2.36**	**26.55**	**10.98**	**8.47**	**48.36**
	Overheads (5%)	0.13	1.47	0.61	0.47	**2.67**
	Contingency (10.5%)	0.25	2.79	1.15	0.89	**5.07**
	Total TEC	**2.74**	**30.80**	**12.74**	**9.83**	**56.11 (TEC)**
	R&D in Support of Constrction	0.91	1.32	0.42		**2.66**
	Other Project Costs			1.70	3.28	**4.97**
	Capital Equipment	0.91	0.88	3.40	4.91	**10.10**
	Inventories		0.44	0.42		**0.86**
	Total TPC	**4.56**	**33.44**	**18.68**	**18.02**	**74.70 (TPC)**

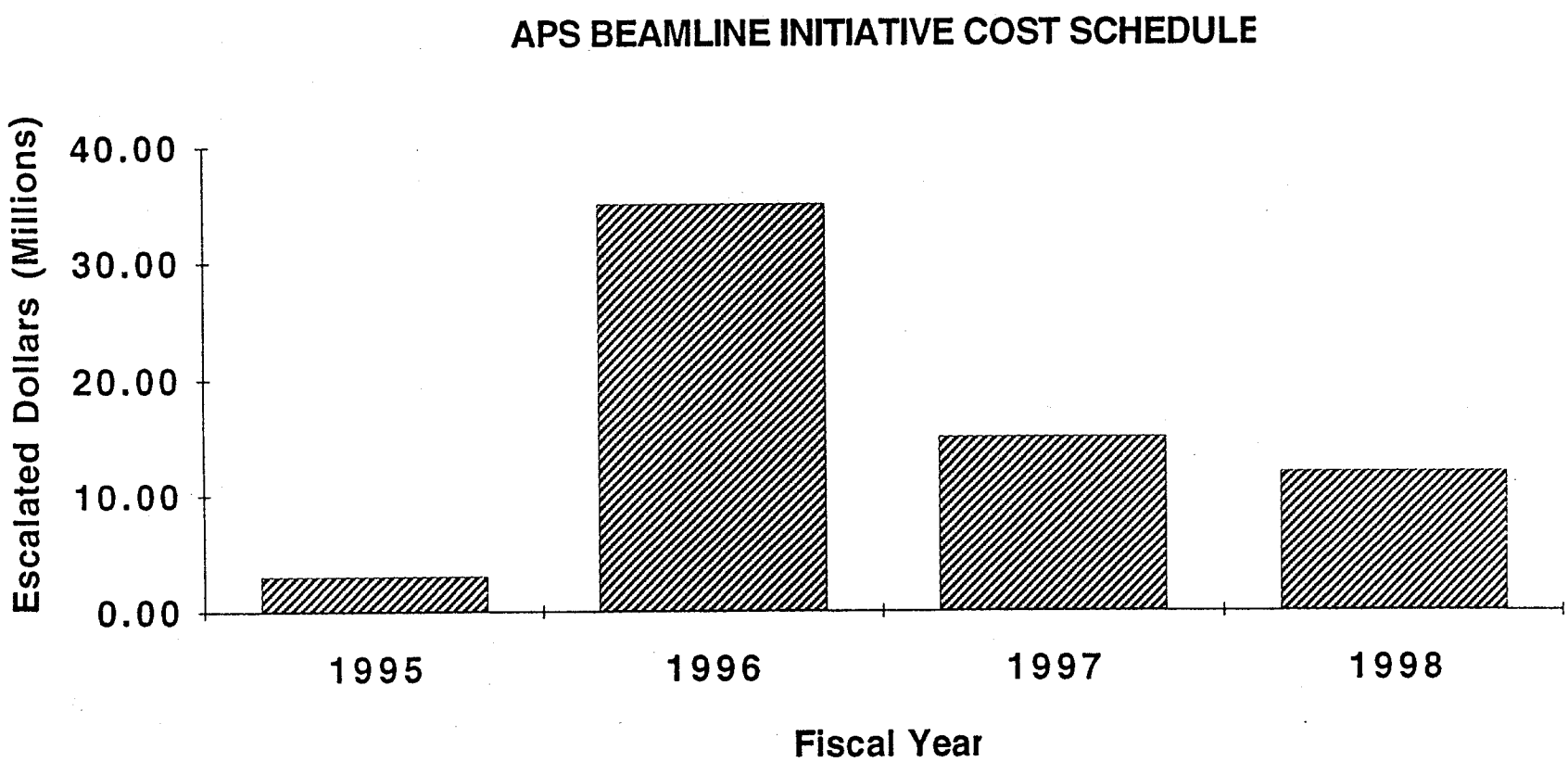
APS BEAMLINE INITIATIVE COST SCHEDULE
Escalated Dollars (Millions)
40.00
30.00
20.00
10.00
0.00
1995
1996
1997
1998
Fiscal Year

Figure 5.4.1

Table 5.4.2

Escalated Rates

Fiscal Year	Inflation (%)	Escalation Factor
1992	-	1.000
1995	9.6	1.096
1996	3.6	1.136
1997	3.7	1.178
1998	3.6	1.221

Table 5.4.3

APS BEAMLINE INITIATIVE COST SCHEDULE
(Escalated M $)

WBS NUMBER	ITEM	1995	1996	1997	1998	Total
4.1	Project Management(2%)	0.05	0.59	0.25	0.20	1.10
4.4	Experimental Facilities	2.54	17.06	12.68	10.14	42.42
	ED & I (7.9%)	0.19	1.25	0.93	0.74	3.11
	Construction Effort	0.34	2.40	1.91	1.56	6.21
	Materials	2.01	13.41	9.84	7.84	33.10
4.7	Conventional Facilities		12.51			12.51
	Construction Management (2.89%)		0.35			0.35
	ED & I		0.89			0.89
	Construction		11.27			11.27
	Subtotal	**2.59**	**30.16**	**12.93**	**10.35**	**56.03**
	Overheads (5%)	0.14	1.67	0.71	0.57	**3.10**
	Contingency (10.5%)	0.27	3.16	1.36	1.09	**5.88**
	Total TEC	**3.00**	**34.99**	**15.00**	**12.00**	**65.00**
						(TEC)
	R&D in Support of Constrction	1.00	1.50	0.50		**3.00**
	Other Project Costs			2.00	4.00	**6.00**
	Capital Equipment	1.00	1.00	4.00	6.00	**12.00**
	Inventories		0.50	0.50		**1.00**
	Total TPC	**5.00**	**37.99**	**22.00**	**22.00**	**87.00**
						(TPC)

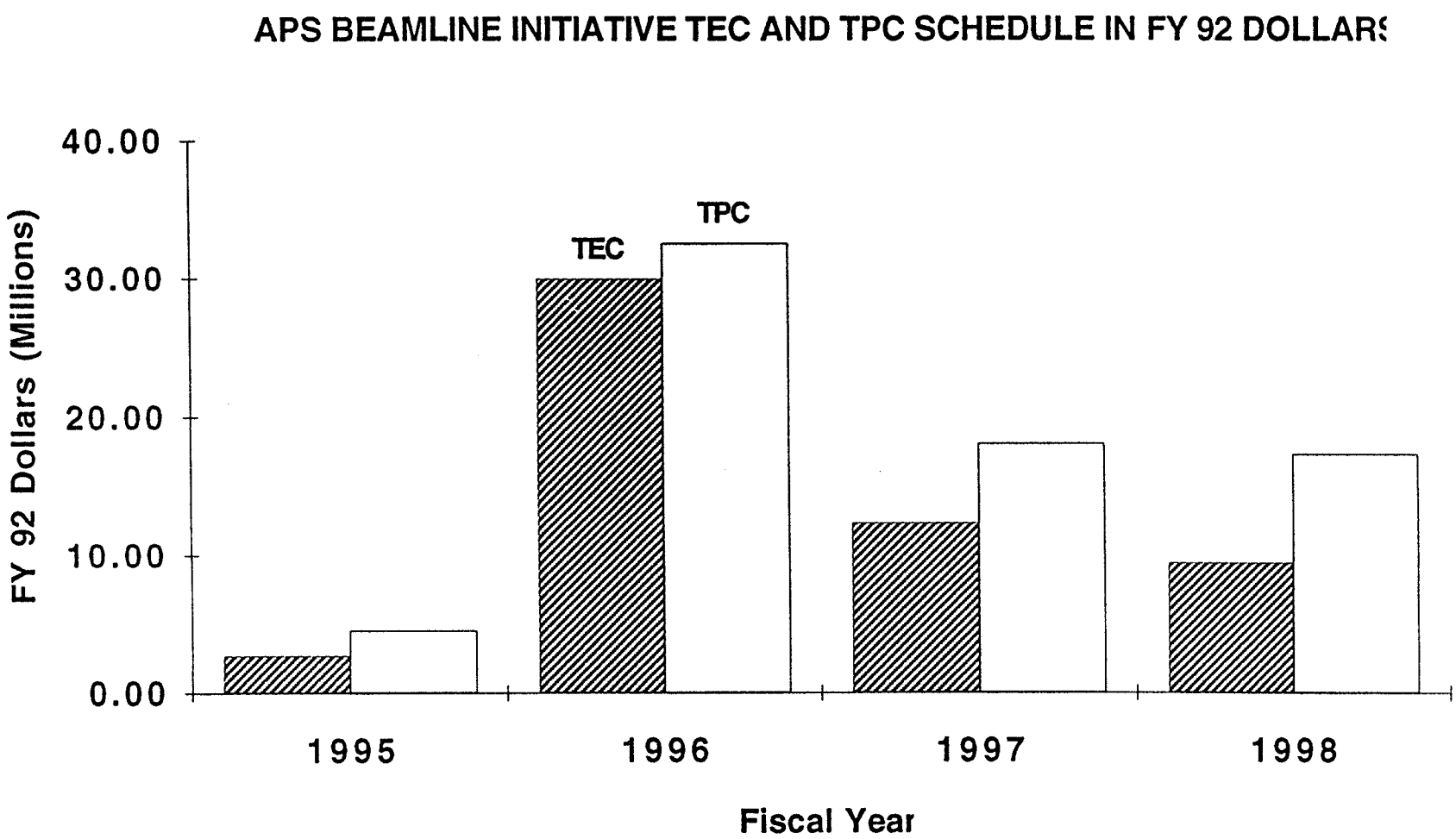
APS BEAMLINE INITIATIVE TEC AND TPC SCHEDULE IN FY 92 DOLLARS
FY 92 Dollars (Millions)
40.00
30.00
20.00
10.00
0.00
TEC
TPC
1995
1996
1997
1998
Fiscal Year

Figure 5.4.2

Table 5.4.4

BA/BO Profile (Escalated M$)

	1995	1996	1997	1998	1999	TOTAL
Escalated BA	3.00	35.00	15.00	12.00	0.00	65.00
Escalated BO	2.50	18.00	28.50	14.00	2.00	65.00

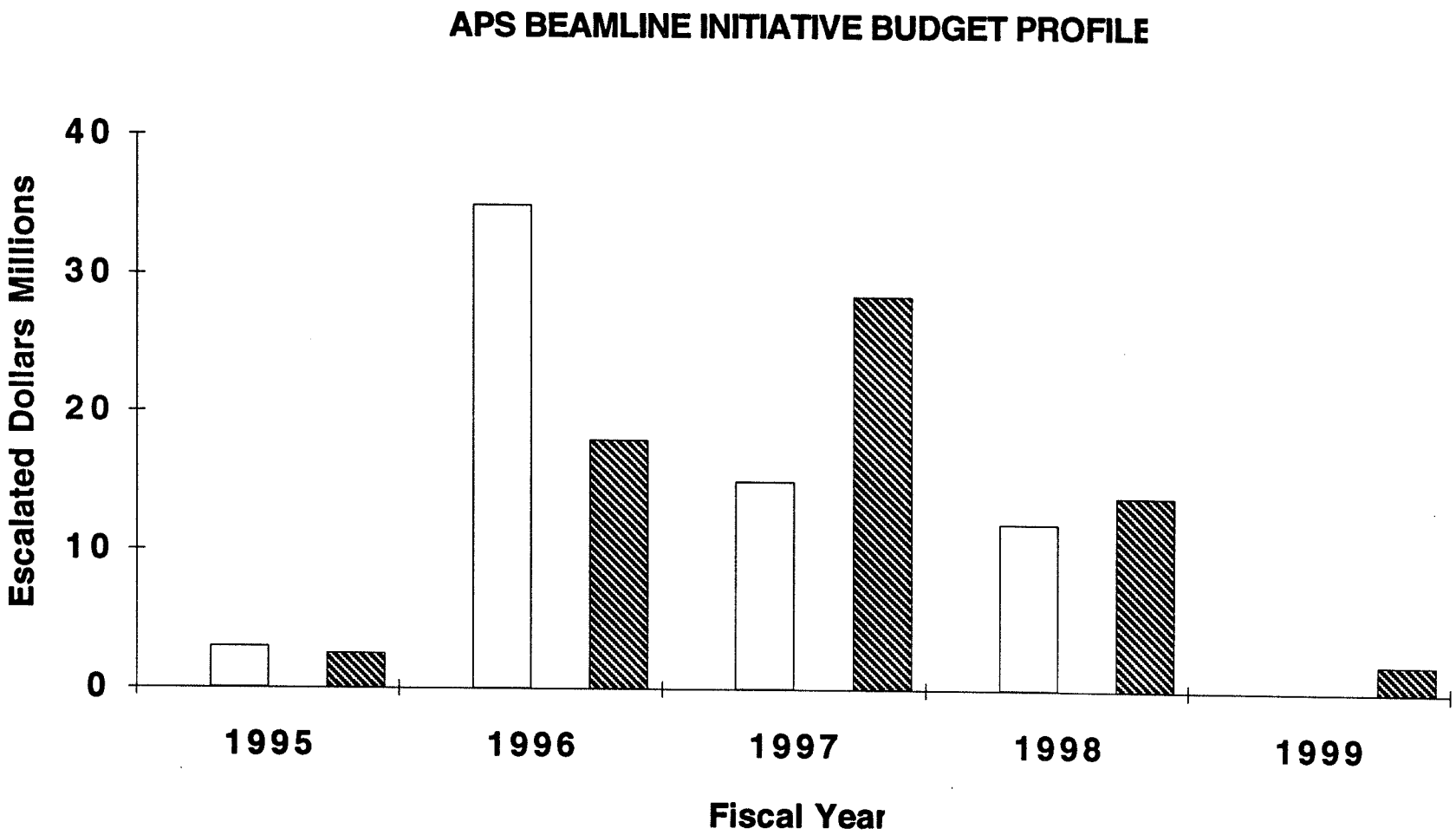
APS BEAMLINE INITIATIVE BUDGET PROFILE
Escalated Dollars Millions
40
30
20
10
0
1995
1996
1997
1998
1999
Fiscal Year

Figure 5.4.3

APPENDIX 1

COLLABORATIVE ACCESS TEAM SUMMARIES

BESSRC-CAT
Basic Energy Sciences Synchrotron Radiation Center CAT

CAT Director and Affiliation	CAT Deputy Director and Affiliation	Institutional Affiliations of Participating Investigators
Pedro A. Montano Argonne Natl. Lab. telephone (708)252-6239 fax (708)252-7777	Gordon S. Knapp Argonne Natl. Lab. telephone (708)252-5488 fax (708)252-7777	Argonne Natl. Lab., ORNL/Univ. of Tennessee

Discipline: Basic Energy Sciences

Sector(s): 2

Focus: Particular emphasis will be placed in the areas of materials science, chemical science, and atomic physics. Among the specific studies planned are time-resolved studies of photoexcited states in photosynthetic materials, real-time investigations of chemical reactions, and time-dependent structural studies of phase transformations in solid compounds. Also planned are structural studies of actinides, studies of ultra-small crystals, trace element analysis, and *in situ* studies of microclusters. Surfaces and interfaces will be investigated, and selective elemental depth profiling techniques will be developed. Structural and magnetic properties of alloys and thin films will be investigated by using circularly polarized x-rays produced by an elliptical multipole wiggler insertion device. Four beamlines with 11 experimental stations will be developed for maximum scientific and cross-disciplinary flexibility.

Other Key Individuals:

Yoshiro Azuma	Physics Division	Argonne Natl. Lab.
Michael Bedzyk	Materials Science Division	Argonne Natl. Lab.
Mark A. Beno	Materials Science Division	Argonne Natl. Lab.
Ronald Chiarello	Materials Science Division	Argonne Natl. Lab.
Paul L. Cowan	Physics Division	Argonne Natl. Lab.
Guy Jennings	Materials Science Division	Argonne Natl. Lab.
James R. Norris	Chemistry Division	Argonne Natl. Lab.
Mohan Ramanathan	Materials Science Division	Argonne Natl. Lab.
Stephen J. Riley	Chemistry Division	Argonne Natl. Lab.
Ivan A. Sellin	ORNL/Univ. of Tenn.	
Lynda C. Soderholm	Chemistry Division	Argonne Natl. Lab.
Randall Winans	Chemistry Division	Argonne Natl. Lab.
Hoydoo You	Materials Science Division	Argonne Natl. Lab.

Bio-CAT
Biophysics CAT

CAT Director and Affiliation	Institutional Affiliations of Participating Investigators
Grant Bunker Illinois Inst. of Technology telephone (312)567-3385 fax (312)567-3396	Boston Univ., Brandeis Univ., Brookhaven Natl. Lab., Bulgarian Academy of Science, Carnegie-Mellon Univ., Childrens Hospital Medical Center, Cornell, Drexel, Georgetown Univ., Harvard, Illinois Inst. of Technol., Johns Hopkins, GFF Ctr., KFG Technology Center, Kings College, Lawrence Berkeley Lab., Marquette, N. Carolina State Univ., Northwestern University, NIH, Ohio State, Oregon Grad. Inst. of Science & Tech., Princeton, Roswell Park, Stanford Univ., Univ. Connecticut, Univ. of Georgia, Univ. of Illinois, Univ. of Michigan, Univ. of Minnesota,Univ. of Missouri, Univ. of Pennsylvania, Univ. of Rochester, Univ. of Wisconsin, VA Med. Ctr., Vanderbilt, Yale Univ.

Discipline: Biophysics

Sector(s): 1

Focus: The major emphasis of this group will be the study of the structure and dynamics of biological and related systems at the molecular level, with a focus on partially ordered samples such as membranes, fibers, and solutions. The primary research techniques will be resonant (anomalous) and nonresonant x-ray diffraction, and x-ray absorption fine structure (XAFS) spectroscopy, with emphasis on time-resolved studies, polarized XAFS, hybrid diffraction/spectroscopic techniques, and novel techniques that exploit the unique properties of the APS.

Other Key Individuals:

J. Kent Blasie	Univ. of Pennsylvania
Allen Blaurock	Kraft General Foods
Martin Caffrey	Ohio State Univ.
Malcolm Capel	Brookhaven Natl. Lab.
Donald L. Caspar	Brandeis Univ.
Britton Chance	Univ. of Pennsylvania
Sol Gruner	Princeton Univ.
Keith Hodgson	SSRL
Richard Korszun	Univ. of Wisc.-Parkside
Lee Makowski	Boston Univ.
James Penner-Hahn	Univ. of Michigan
Gerold Rosenbaum	Argonne Natl. Lab.
Dale Sayers	N. Carolina State Univ.
Elizabeth Theil	N. Carolina State Univ.
Edwin Westbrook	Argonne Natl. Lab.

CARS-CAT
Consortium for Advanced Radiation Sources CAT

CAT Director and Affiliation	Institutional Affiliations of Participating Investigators
J. Keith Moffat The Univ. of Chicago telephone (312)702-2116 fax (312)702-1896	Air Products & Chemicals, Inc., Argonne National Lab., Brandeis Univ., Bristol Univ., Brookhaven Natl. Lab., California Inst. of Tech., Carnegie Institute of Washington, Cornell University, Georgia State Univ., Harvard Med. School, Johns Hopkins Univ., Johnson Space Ctr.-NASA, Massachusetts Inst. of Tech., Michigan State Univ., Northeastern Univ., Northern Illinois Univ., Ohio State Univ., Purdue Univ., Queens College, Research Inst. of Scripps Clinic, Rutgers Univ., Southern Illinois Univ., Stanford Univ., SUNY, Texas A&M Univ., The Univ. of Chicago, Univ. of Alabama, Univ. of California, Univ. of Georgia, Univ. of Hawaii, Univ. of Illinois, Univ. of New Mexico, Univ. of Notre Dame, Univ. of Oxford, Univ. of Texas, Univ. of Toronto, Univ. of Virginia, UOP, Univ. of Wisconsin, Washington State Univ., The Wistar Institute

Discipline: Structural Biology, Material Science, Geosciences, Chemical Sciences, Soil/Environmental Sciences

Sector(s): 2

Focus: This multidisciplinary group, which contains more than 140 scientists from four national users groups (BioCARS, ChemCARS, GeoCARS, Soil/EnviroCARS), and three Illinois Universities, will enable scientists from several disciplines to interact and receive maximum exposure to new approaches and techniques. In the area of structural biology, the emphasis will be on elucidation of molecular structure, specifically viral structure, with the objective of developing rational, structure-based, effective anti-viral drugs. In addition, time-resolved studies of biological processes in crystals, fibers, membranes, and solutions will be conducted. Earth, planetary, and soil/environmental sciences research will include surface scattering, microcrystallography, and time-resolved work, as well as high-pressure diffraction, spectroscopy, microprobe analyses, and powder diffraction. These techniques should make possible major advances in understanding such diverse processes as earthquake development, and nitrogen fixation in roots. Chemical sciences studies will involve single-crystal diffraction, spectroscopy, surface scattering, and small-angle scattering for external surface studies; chemical crystallography; x-ray absorption spectroscopy; study of metal clusters, metallic glasses and transmetalation chemistry; study of microporous and layered materials; and polymer studies.

Other Key Individuals:

W. A. Bassett (GeoCARS), Cornell Univ.
G. E. Brown, Jr. (GeoCARS), Stanford Univ.
L. F. Dahl (ChemCARS), Univ. of Wisc.
J. E. Johnson (BioCARS), Purdue Univ.
C. Kimball (Chairman, CARS Board of Governors), NIU
E. Lattman (BioCARS), Johns Hopkins Univ.
W. H. Orme-Johnson (ChemCARS), MIT
C. T. Prewitt (GeoCARS), Carnegie Inst.
M. L. Rivers (CARS), Univ. of Chicago
D. G. Schulze (Soil/EnviroCARS), Purdue
W. Schildkamp (CARS), Univ. of Chicago
S. Sutton (CARS), Univ. of Chicago
J. W. Stucki (Soil/EnviroCARS), U of IL
P. J. Viccaro, CARS, Univ. of Chicago

CMC-CAT
Complex Materials CAT

CAT Director and Affiliation	CAT Deputy Director and Affiliation	Institutional Affiliations of Participating Investigators
Sunil K. Sinha Exxon Res. & Engineering telephone (908)730-2875 fax (908)730-3031	Richard C. Hewitt Exxon Res. & Engineering telephone (516)282-4828 516/282-5239	BARC India, Brookhaven Natl. Lab., Exxon Res. & Engineering, Princeton Univ., Univ. of California-Santa Barbara,Univ. of Pennsylvania, Univ. of Tennessee/Oak Ridge Natl. Lab.

Discipline: Structural Characterization of Complex Materials

Sector(s): 1

Focus: This group will focus on the structural characterization of complex materials, including complex fluids and self-assembling systems, surfaces and interfaces, and heterogeneous materials. Experimental techniques to be used include the following: time-dependent diffraction and scattering studies, high-resolution small-angle scattering and crystallography, surface scattering, photon-correlation spectroscopy, and several types of imaging techniques.

Other Key Individuals:

J. Kent Blasie	Univ. of Pennsylvania	B. M. Ocko	Brookhaven Natl. Lab.
T. Egami	Univ of Pensylvania	E. Ward Plummer	Univ. of Tenn./ORNL
Peter M. Eisenberger	Princeton University	R. A. Register	Princeton Univ.
J. Fischer	Univ. of Pennsylvania	C. R. Safinya	Univ. of Calif/Santa Barbara
L. D. Gibbs	Brookhaven Natl. Lab.	M. Sansone	Exxon Res. & Engineering
Sol M. Gruner	Princeton Univ.	M. X. Sanyal	BARC India
P. Heiney	Univ. of Pennsylvania	E. B. Sirota	Exxon Res. & Engineering
H. E. King, Jr.	Exxon Res. & Engineering	G. H. Via	Exxon Res. & Engineering
K. S. Liang	Exxon Res. & Engineering		

DND-CAT
E. I. du Pont de Nemours & Co. - Northwestern University - The Dow Chemical Co. CAT

CAT Chairman and Affiliation	CAT Director and Affliliation	Institutional Affiliations of Participating Investigators
Jerome B. Cohen Northwestern Univ. telephone (708)491-5220 fax (708)491-8539	Panayotis (Joe) Georgopoulos Synchrotron Research Center telephone (708)864-0077 fax (708)864-0196	E.I. du Pont de Nemours & Co., Northwestern Univ.

Discipline: Materials Science, Tomography, Real-Time Studies

Sector(s): 1

Focus: Although many fields of materials science and engineering will be represented by this research group, the major effort will be directed to two areas: the study of two-dimensional and quasi-two-dimensional atomic structures (surfaces, interfaces, and thin films) and polymer science and technology. In the first area, specific areas of interest include the study of solid-liquid electrolyte interfaces, oxide surfaces, intercrystalline interfaces, thin-film growth *in situ*, and polymer film surfaces. In the polymer science area, this group will study polymer deformation, crystallization and melting of polymers, and polymer deformation and fracture. In addition, some work will be conducted in the area of atomic structure of bulk materials.

Other Key Individuals:

Randolph Barton	E.I. du Pont de Nemours & Co.	Benjamin Hsiao	E.I. du Pont de Nemours & Co.
Michael J. Bedzyk	Northwestern University	James A. Ibers	Northwestern University
Joseph C. Calabrese	E.I. du Pont de Nemours & Co.	Hamlin Jennings	Northwestern University
Stephen H. Carr	Northwestern University	Robert C. Johnson	E.I. du Pont de Nemours & Co.
Robert P. H. Chang	Northwestern University	Glover A. Jones	E.I. du Pont de Nemours & Co.
Yip-Wah Chung	Northwestern University	John B. Ketterson	Northwestern University
Don Coulman	E.I. du Pont de Nemours & Co.	Brian Moran	Northwestern University
Buckley Crist, Jr.	Northwestern University	Manijeh Razeghi	Northwestern University
Isaac M. Daniel	Northwestern University	David N. Seidman	Northwestern University
Donald E. Ellis	Northwestern University	Duward F. Shriver	Northwestern University
Katherine T. Faber	Northwestern University	Charlie C. Torardi	E.I. du Pont de Nemours & Co.
Lawrence Firment	E.I. du Pont de Nemours & Co.	Julia Weertman	Northwestern University
K. H. Gardner	E.I. du Pont de Nemours & Co.	Dan Q. Wu	E.I. du Pont de Nemours & Co.
Richard L. Harlow	E.I. du Pont de Nemours & Co.		

IMCA-CAT
Industrial Macromolecular Crystallography Association CAT

CAT Chairman and Affiliation	CAT Director and Affliliation	Institutional Affiliations of Participating Investigators
Keith Watenpaugh The Upjohn Co. telephone (616)385-7755 fax (616)385-7522	Timothy Morrison Ill. Institute of Tech. telephone (312)567-3381 fax (312)567-3396	Abbott Labs, Bristol-Myers Squibb, Merck Pharmaceutical Co., Glaxo Inc., Eli Lilly and Company, Ill. Institute of Tech., Merck & Co. Inc., Miles Inc., Monsanto Company, Parke-Davis, The Procter & Gamble Distributing Co., SmithKline Beecham Pharmaceuticals, Sterling Winthrop Inc., The Upjohn Co.

Discipline: Structural Biology/Macromolecular Crystallography

Sector(s): 1

Focus: This group seeks to determine the structures of biological macromolecules in order to aid in the design of biologically active compounds for medicine and agriculture, understand the mechanism of action of biological macromolecules, guide protein engineering to develop molecules with improved properties, assist in product development, and meet regulatory requirements.

Key Features: Both fundamental and proprietary work will be performed. It should be noted that the research groups within IMCA will, in general, have a *competitive*, rather than a *collaborative*, scientific relation.

Other Key Individuals:

C. Abad-Zapatero	Abbott Labs	William C. Stallings	Monsanto Co.
John S. Sack	Bristol-Myers Squibb	Joel D. Oliver	The Procter & Gamble Dist.
Karl D. Hardman	DuPont Merck Pharm. Co.	Sherin S. Abel-Meguid	SmithKline Beecham Phar.
Steven R. Jordan	Glaxo Inc.	F. Raymond Salemme	Sterling Winthrop, Inc.
James P. Springer	Merck & Co., Inc.	Keith D. Watenpaugh	The Upjohn Co.
Arthur H. Robbins	Miles Inc.		

IMM-CAT
IBM-MIT-McGill C AT

CAT Director and Affiliation	CAT Deputy Director and Affiliation	Institutional Affiliations of Participating Investigators
G. Brian Stephenson IBM Research Div. telephone (914)945-3008 fax (914)945-2141	Simon G. J. Mochrie MIT telephone (617)253-6588 fax (617)258-6883	IBM Research Div., MIT, McGill Univ., Queens Univ.

Discipline: Dynamic Phenomena in Materials Science and Physics

Sector(s): 1

Focus: The scientific program of IMM-CAT will focus on dynamic phenomena in materials science and condensed matter physics. Elements of our program fall into four areas: time-resolved scattering studies of bulk phase transition kinetics; scattering studies of surface structure, kinetics, and growth; scattering and spectroscopy studies of the atomic structure of buried interfaces; and intensity fluctuation spectroscopy studies using coherent x-rays. There is much in common between these areas, both in the techniques used and the systems studied. For example, measurements of kinetics will be extended from bulk phase transitions to surface phase transition. Growth will be studied both at surfaces and at buried interfaces. X-ray diffraction techniques developed for surfaces will be applied to buried interfaces. The development of x-ray intensity fluctuation spectroscopy will allow the study of dynamics not only in non-equilibrium systems, but also in equilibrium systems, and so will provide a new probe to study all aspects of kinetics.

Key Features: The ID beam line will be optimized for scattering experiments and will incorporate undulator A, with flexible options for focusing and energy resolution. The BM beam line will be optimized for resonant scattering and spectroscopy.

Other Key Individuals:

Robert J. Birgeneau	MIT	J. David Litster	MIT
G. Slade Cargill	IBM Research Div.	Owen Melroy	IBM Research Div.
Joseph G. Gordon	IBM Research Div.	Marsha A. Singh	Queen's University
Thomas J. Greytak	MIT	Mark Sutton	McGill University
Glenn Held	IBM Research Div.	Michael F. Toney	IBM Research Div.
Jean L. Jordan-Sweet	IBM Research Div.		

MATT-CAT
Center for Real-Time X-Ray Studies CAT

CAT Director and Affiliation	CAT Deputy Director and Affiliation	Institutional Affiliations of Participating Investigators
Walter Lowe AT&T Bell Labs telephone (908)582-2811 fax (908)582-2451	Roy Clarke University of Michigan telephone (313)764-4466 fax (313)764-2193	AT&T Bell Labs., Univ. of Michigan

Discipline: Physics, Real-time Structural Studies of Materials, Chemical Sciences

Sector(s): 1

Focus: The emphasis of this group will be time-resolved studies of materials under real dynamic conditions. The microscopic analysis of physical and chemical processing, behavior under stress and structural relaxation, and the kinetic mechanisms of growth will be addressed. The beamlines to be developed will allow new kinds of coherent spectroscopic measurements of solids and complex fluids.

Other Key Individuals:

Gabriel Aeppli	AT&T Bell Labs	Robert M. Fleming	AT&T Bell Labs
James Allen	University of Michigan	John L. Gland	University of Michigan
Meigan Aronson	University of Michigan	A. Refik Kortan	AT&T Bell Labs
Michael Bretz	University of Michigan	Robert MacHarrie, Jr.	AT&T Bell Labs
Steve Dierker	University of Michigan	Mathew A. Marcus	AT&T Bell Labs
Kenneth Evans-Lutterodt	AT&T Bell Labs	James Penner-Hahn	University of Michigan
Robert M. Fleming	AT&T Bell Labs	Ronald S. Pindak	AT&T Bell Labs

MICRO-CAT
A Micro-Investigation of Composition Research Organization CAT

CAT Director and Affiliation	Institutional Affiliations of Participating Investigators
Gene E. Ice Oak Ridge Natl. Lab. telephone (615)574-2744 fax (615)574-7659	Lawrence Berkeley Lab., Lawrence Livermore Natl. Lab., Oak Ridge Natl. Lab., Univ. of Illinois

Discipline: Microprobe Analysis of Material Structure, Biological, & Environ. Samples

Sector(s): 1

Focus: This group proposes to develop and operate a microprobe facility with wide-ranging applications in the fields of materials science, chemistry, geochemistry, environmental science, and medicine. Materials science studies will include the measurement of impurity effects and strains in crack growth and fracture; ductility of grain boundaries; the study of creep, ceramics, and reinforced composites; diffusion studies; the study of integrated circuits and microchips; and radiation effects. Environmental and biological studies include such things as measurement of trace element distribution in tree rings, fish scales, clam shells, and other time-dependent growth tissues where contamination levels can be related to chronology of exposure, and the measurement of contamination transport by small particles.

Key Features: Ultra low minimum detectable limit with small probe dimensions. Microdiffraction for strain measurment with a resolution $\frac{\Delta d}{d} \sim 10^{-4}$ Microtomography for 3-D imaging of microstructures.

Other Key Individuals:

John Kinny	Lawrence Livermore National Laboratory
Richard Ryon	Lawrence Livermore National Laboratory
Ken Skulina	Lawrence Livermore National Laboratory
Cullie Sparks, Jr.	Oak Ridge National Laboratory
Albert C. Thompson	Lawrence Berkeley Laboratory

MR-CAT
Materials Research CAT

CAT Director and Affiliation	Institutional Affiliations of Participating Investigators
Bruce Bunker Univ. of Notre Dame telephone (219)239-7219 fax (217)239-5952	Amoco, IIT, Northwestern Univ., Florida Universities, Univ. of Notre Dame

Discipline: Materials Time-Resolved Scattering & Spectroscopy, *in-situ* Measurements

Sector(s): 1

Focus: Investigators in this group have overlapping interests including time-resolved scattering and spectroscopy, spatially resolved measurements, *in situ* measurements, and studies involving elliptically polarized radiation. Research conducted by this CAT will include wide- and small-angle scattering, diffraction, reflectivity, and various spectroscopic studies of phase transitions, disordered systems such as alloys and amorphous materials, organic thin films and self-assembled systems, magnetic materials, fluids, catalysts, polymers, and other condensed-matter systems.

Key Features: tapered undulator; multilayer broad-band optics; step-scan and slewing monochromators; dispersive spectroscopy

Other Key Individuals:

Pulak Dutta	Northwestern Univ.
John Faber, Jr.	Amoco
Timothy Morrison	IIT
Stephen Nagler	Univ. of Florida

μ-CAT
Midwest Universities CAT

CAT Director and Affiliation	CAT Deputy Director and Affliliation	Institutional Affiliations of Participating Investigators
David W. Lynch Iowa State Univ. telephone (515)294-3476 fax (515)294-0689	Alan Goldman Iowa State Univ. telephone (515)294-3585 fax (515)294-0689	Georgia Tech., Iowa State, Kent State, SUNY/Stony Brook, Univ. of Missouri/Columbia, Univ. Nebraska/Lincoln, Univ. of Wisconsin/Madison, Washington Univ.

Discipline: Materials Science

Sector(s): 1

Focus: This group proposes studies in four major areas: magnetic x-ray scattering, surface and interface scattering, microdiffraction, and bulk and surface phase transitions. Magnetic x-ray scattering will be used to study magnetic structures and phase transitions. The surface scattering studies will center on the kinetics and growth of two-dimensional systems, the role of defects in epitaxy, ordered nonepitaxial overlayers, and phase transitions in liquid crystals. Microdiffraction studies will focus on small-grained samples of unusual interest (quasicrystals and mineral particles of extraterrestrial origin).

Key Features: 1:1 imaging of undulator A radiation, variable polarization via phase plate, microdiffraction capability, 4-20 keV spectral region

Other Key Individuals:

Edward Conrad	GA Inst. of Tech.	Haskell Taub	Univ. of MO/Columbia
H. F. Franzen	Iowa State Univ.	Robert de Angelis	Univ. NE/Lincoln
Clifford Olson	Iowa State Univ.	Peter Stephens	SUNY-Stony Brook
Douglas Robinson	Iowa State Univ.	Thomas Bernatowicz	Washington Univ.
Costa Stassis	Iowa State Univ.	Patrick Gibbons	Washington Univ.
Michael Tringides	Iowa State Univ.	Kenneth Kelton	Washington Univ.
Satyendra Kumar	Kent State Univ.	Michael Winokur	Univ. of WI/Madison
Michael Greenlief	Univ. of MO/Columbia		

PNC-CAT
Pacific Northwest Consortium CAT

CAT Director and Affiliation	CAT Deputy Director and Affiliation	Institutional Affiliations of Participating Investigators
Edward A. Stern Univ. of Washington telephone (206)543-2023 fax (206)685-0635	E. Daryl Crozier Simon Fraser Univ. telephone (604)291-4827 fax (604)291-3592	Battelle-Pacific Northwest Lab., Simon Fraser Univ., The Boeing Co., Univ. of British Columbia, Univ. of Oregon, Univ. of Saskatchewan, Univ. of Washington, Washington State Univ.

Discipline: Environmental Analysis, Materials Research, Macromolecular Crystallography

Sector(s): 1

Focus: The techniques of spatial and time-resolved XAFS and diffraction (including Laue diffraction), spatial resolved tomography, fluorescence microprobe analysis, surface and interface diffraction, x-ray Raman scattering diffraction anomalous fine structure, and macromolecular crystallography will be used to study a variety of problems in the environmental and materials sciences areas. Materials research will include fundamental studies, as well as studies relating to the interaction of materials with the environment. Environmental sciences studies involve natural systems that are heterogeneous and complex. Macromolecular crystallography efforts will focus on biological methods of sequestering environmental toxins.

Other Key Individuals:

James E. Amonette	Battelle-Pacific NW Lab.	Ethan A. Merritt	Univ. of Washington
Fredrick Brown	Univ. of Washington	Bradford B. Pate	Washington State Univ.
Robert L. Ingalls	Univ. of Washington	Larry B. Sorensen	Univ. of Washington
Michael L. Knotek	Battelle-Pacific NW Lab.	Ronald E. Stenkamp	Univ. of Washington
Yanjun Ma	Battelle-Pacific NW Lab.	Ray Stults	Battelle-Pacific NW Lab.
Shas V. Mattigod	Battelle-Pacific NW Lab.		

SBC-CAT
Structural Biology Center CAT

CAT Director and Affiliation	Institutional Affiliations of Participating Investigators
Edwin M. Westbrook Argonne Natl. Lab. telephone (708)252-3983 fax (708)252-6126 e-mail: westbrook@anbipc.bim.anl.gov	Argonne Natl. Lab., Brandeis Univ., Cold Spring Harbor Lab., Columbia Univ., Cornell Univ., Genentech, Inc., Univ. of AL-Birmingham, Univ. of Minnesota, Univ. of Washington, Univ. of Wisc.-Madison, Washington Univ., Weizmann Inst. of Science, Yale Univ.

Discipline: Structural Biology

Sector(s): 1

Focus: The scientific focus of the SBC will be macromolecular crystallography. Five principal applications are expected to dominate SBC use: monochromatic data collection from microcrystals; monochromatic data collection from crystals with large cell dimensions; monochromatic data collection from large numbers of closely similar crystal structures; data collection at several discrete energies from a single crystal for use in the multiple-energy anomalous dispersion (MAD) phasing method; and polychromatic (Laue) data collection for either static or kinetic structure analysis.

Key Features: Development of detectors; data acquisition, processing, and reduction software; development of experimental methods.

Other Key Individuals:

Leonard J. Banaszak	University of Minnesota	F. Scott Mathews	Washington University
Charles E. Bugg	Univ. of AL-Birmingham	Ethan A. Merritt	University of Washington
Steven E. Ealick	Cornell University	Ivan Rayment	Univ. of Wisc.-Madison
Wayne Hendrickson	Columbia University	Paul Sigler	Yale University
Anthony A. Kossiakoff	Genetech, Inc.	Ada Yonath	Weizmann Inst. of Science

SRI-CAT
Synchrotron Radiation Instrumentation CAT

CAT Director and Affiliation	CAT Deputy Directors and Affiliations	Institutional Affiliations of Participating Investigators
Dennis M. Mills Argonne Natl. Lab. telephone (708)252-5680 fax (708)252-3222	Efim Gluskin Argonne Natl. Lab. telephone (708)252-4788 fax (708)252-3222 Roberto Colella Purdue University telephone (317)494-3029 fax (317)494-0706	Argonne Natl. Lab., Cornell, Exxon, LBL, NIST, Purdue Univ., Stanford Synchrotron Radiation Lab., Univ. of Houston

Discipline: X-ray Physics and Novel Synchrotron Radiation Instrumentation

Sector(s): 3

Focus: This CAT will focus on both short- and long-term objectives. Short-term objectives include the development and diagnosis of insertion devices, high-heat-load optics, and other novel techniques, all of which will provide a baseline of operation for the entire community of APS CATs. The long-term objective is the development and implementation of strategic instrumentation programs that will open up new areas of research at the APS. Among the initial strategic instruments to be developed are a millivolt-resolution back-scattering beamline for inelastic scattering, a microvolt-resolution instrument for nuclear-Bragg scattering, a 1-4 keV radiation source and beamline, and a microfocusing optics and techniques beamline.

Other Key Individuals:

Lahsen Assoufid	APS/XFD	Szczesny B. Krasnicki	APS/XFD
Stephen Durbin	Purdue University	Vladimir Kushnir	APS/XFD
Patricia Fernandez	APS/XFD	Robert Popper	APS/XFD
Stefan Joksch	APS/XFD	Kevin Randall	APS/XFD

UNI-CAT
A University-National Laboratory-Industry CAT

CAT Director and Affiliation	Institutional Affiliations of Participating Investigators
Haydn Chen Univ. of Ill. telephone (217)333-7636 fax (217)333-2736 e-mail: profchen@ux1.cso.uiuc.edu	Allied Signal Inc., Allied Signal Res. and Technol., Oak Ridge Natl. Lab., Univ. of Illinois/Urbana-Champaign, UOP Res. Center

Discipline: Materials Science, Structural Crystallography, Time-Resolved Studies

Sector(s): 1

Focus: This group proposes research at the cutting edge of the fields of physics, chemistry, biology, materials science, chemical engineering, polymer sciences, and geology, with an emphasis on projects that are cross-disciplinary in both scientific interest and methodology. Major efforts will be in the areas of macromolecular crystallography, diffuse x-ray scattering, surface/interface diffraction and scattering, millivolt/nanovolt resolution scattering spectroscopy, magnetic x-ray scattering, time-resolved structural scattering, and x-ray absorption spectroscopy.

Key Features: Dedicated surface/interface facility including MBE and CVD chambers, time-resolved studies down to nanosecond range, millivolt/nanovolt resolution scattering and spectroscopy.

Other Key Individuals:

Howard Birbaum	Univ. of Illinois/U-C	Heinz J. Robota	Allied-Signal Inc.
Robert W. Broach	UOP Research Center	Ian Robinson	Univ. of Illinois/U-C
Tai-chang Chiang	Univ. of Illinois/U-C	Ralph Simmons	Univ. of Illinois/U-C
Bennett C. Larson	Oak Ridge Natl. Lab.	Eliot Specht	Oak Ridge Natl. Lab

APPENDIX 2

RESEARCH AND DEVELOPMENT PROGRAM

RESEARCH AND DEVELOPMENT PROGRAM

A.1 Introduction

Assuming that the construction of APS Beamline Initiative will begin in FY 1995, the scope of the R&D program has been described in this Appendix. It is clear that much emphasis of this R&D will be on the instrumentation development required in the future. It should be also realized that there are various elements of accelerator systems that will strongly interact with the requirements of the experimental facilities instrumentation and that this R&D is possible in FY 1995 after commissioning of the storage ring.

Many of the components of the experimental facilities in the future will be one of the kind. Hence, extra assurance must be established in the final performance of the facilities through a strong R&D program on all the subcomponents, and such a program should begin very early.

Key R&D items require large amounts of capital funds to implement, and this has been folded in the current planning.

A.2 Insertion Devices

The uniqueness of the IDs required to meet the future user needs demand an early beginning to R&D studies in the following areas:

- UHV requirements in the straight section in which in-vacuum IDs will be introduced.
- ID baking capabilities and influence on the magnetic performance.
- Capabilities to perform *in situ* magnetic measurements on in-vacuum IDs.
- ID vacuum chamber prototype design for in-vacuum IDs, superconducting IDs, polarization IDs, and multiple-source IDs.
- Influence of new IDs on the storage-ring performance.
- Rf interaction with in-vacuum IDs and unusual ID vacuum chamber geometries.
- Heat loads from the IDs proposed in the new initiative on the storage-ring vacuum chamber.
- Development of new magnet geometries for new IDs.
- R&D to define new devices capable of delivering unique radiation properties.

A.3 Beamline Front Ends

Anticipated heat loads that will have to be handled by the front-end components on future beamlines demand enhancement of heat transfer capabilities by an order of magnitude. Such requirements can only be met by extensive engineering R&D in developing new heat transfer techniques and through the identification and testing of new materials for these unique applications.

The R&D activities will address the needs of almost all the components of the front ends. The emphasis will be in the following areas:

- Beam stops
- Apertures
- Photon beam position monitors
- Safety shutters
- Windows for beamlines
- Personnel safety and control
- Detailed radiation safety analysis

Because the requirements will widely vary from one front end to another in the future, early beginning of this activity is essential. These activities will use the experience and capabilities gained in developing the beamlines for the current construction project.

A.4 Beamline Components

This R&D program can simply be divided into the following:

- Radiation physics
- X-ray optics
- Metrology
- Detector development
- Storage Ring Performance

The beamlines to be developed by the SRI CAT (primarily made up of APS Experimental Facilities staff) will provide an environment to perform much of the R&D needed in the above areas. These SRI CAT beamlines will begin their operation during FY 1995-96. The future beamlines are unique and differ from one beamline to the next. However, the R&D requirements share some common needs. They include the R&D on unique radiation properties, high heat load optics, metrology capabilities, beamline controls, detector capabilities, and data acquisition, handling, and analysis. For each of the new IDs the performance of the operation of each of the storage ring components will have to be developed in detail, as will the dynamics of the positron lattice.

A.5 Cost and Schedule for R&D Program and Other Support

The cost and schedule for accomplishing the R&D work are based on the brief narrative of R&D items identified in this appendix. One of the most important considerations in developing the schedule is the need for a smooth transition from the current construction phase to the R&D phase described here and from the R&D phase to the programmatic operations phase of the added beamlines and other facilities to the APS.

Costs for R&D effort, materials and services, other project costs, and equipment are shown in Table A.1. The other project costs include the cost of operating new facilities provided by this Initiative, programmatic operations costs as the beamlines begin their operation, additional costs for the ES&H effort on the new facilities added by this Initiative, and maintenance costs of the facilities added here. The dollars shown are cost escalated in each fiscal year. The dollar figures shown here are consistent with the Schedule 44 document submitted to the DOE in June 1993.

Table A.1

Effort and Cost for Research and Development Program and Other Project Costs				
Activity	FY1995	FY1996	FY1997	FY1998
Effort (WTE)				
Accelerator Systems	0	1	1	0
Controls	0	1	1	0
Insertion Device Development	2	2	2	3
Front End Development	2	2	2	3
X-ray Optics Development	1	2	2	2
Instrument Development	0	0	1	2
Detector Development	0	0	1	1
Effort Total (WTE)	5	8	10	12
Effort Cost (Escalated in $K)	700	1,000	350	0
Materials and Services Cost (Escalated in $K)	300	500	150	0
Other Project Costs*	0	0	2,000	4,000
Capital Equipment Cost (Escalated in $K)	1,000	1,000	4,000	6,000
TOTAL COST (Escalated in $K)	2,000	2,500	6,500	10,000

* This includes facility operating cost for the items in this initiative, programatic research costs, ES&H costs, and maintenance costs.

APPENDIX 3

COPY OF SCHEDULE 44

DEPARTMENT OF ENERGY
FY 1995 FIELD BUDGET PROCESS
CONSTRUCTION PROJECT DATA SHEETS
ENERGY SUPPLY RESEARCH AND DEVELOPMENT - PLANT AND CAPITAL EQUIPMENT
BASIC ENERGY SCIENCES

(Tabular dollars in thousands. Narrative material in whole dollars)

---

1. Title and Location of Project — APS Beamline Initiative, Argonne National Laboratory, Argonne, Illinois

2. Project No. 95-CH-061

3a. Date A/E work initiated (Title 1 design start): 1st Quarter FY 1995

3b. A/E Work (Title I & II) duration: Conventional Facilities - 12 months

4a. Date physical construction starts: 2nd Quarter FY 1995

4b. Date construction ends: 4th Quarter FY 1998

5. Previous Construction Cost Estimate: NONE

6. Current Construction Cost
Estimate: $65,000
Date: May 1993

TEC: $65,000
TPC: $87,000

---

7. Financial Schedule:

Fiscal Year	Appropriations	Obligations	Costs
1995	3,000	3,000	2,500
1996	35,000	35,000	18,000
1997	15,000	15,000	28,500
1998	12,000	12,000	14,000
1999	0	0	2,000

CONSTRUCTION PROJECT DATA SHEETS

1. Title and Location of Project	APS Beamline Initiative Argonne National Laboratory Argonne, Illinois	2. Project No. 95-CH-061

8. Brief Physical Description of Project

The DOE is building a new generation 6-7 GeV Synchrotron Radiation Source known as the Advanced Photon Source (APS) at Argonne National Laboratory (Project No. 89-R-402). This facility, to be completed in FY 1997, will provide 70 x-ray sources of unprecedented brightness to meet the research needs of virtually all scientific disciplines and numerous technologies. The technological research capability of the APS in the areas of energy, communications, and health will enable new partnerships between the DOE and U.S. industry. Current funding for the APS will complete the first phase of construction so that scientists can begin their applications in FY 1997. It is now appropriate to plan to construct a set of beamlines to perform state-of-the-art x-ray research by the Collaborative Access Teams made up of researchers from universities, federal laboratories, and industry. Comprehensive utilization of the unique properties of APS beams will enable cutting-edge research not currently possible. These beamline facilities will be targeted for the important science/technology goals of the U.S. x-ray community and will be available on a peer-review or proprietary basis to all Collaborative Access Teams.

In this APS Beamline Initiative, 2.5-m-long insertion-device x-ray sources will be built on 4 straight sections of the APS storage ring and an additional 4 bending-magnet sources will also be put in use. The front ends for these 8 x-ray sources will be built to contain and safeguard access to these bright x-ray beams. In addition, funds will be provided to build standard beamline components to meet the scientific and technological research demands of the Collaborative Access Teams. This new initiative will also include four user laboratory modules designed to meet the x-ray research needs of the users.

The following is a brief physical description of the APS Beamline Initiative:

TECHNICAL COMPONENTS: The major component for the production of x-rays will be 2.5-m-long insertion devices and bending magnets. The insertion devices will be built on 4 available straight sections of the storage ring and the 4 bending-magnet sources are located between the insertion-device x-ray sources. All these x-ray sources will be contained by front ends consisting of beam stops, safety shutters, filters and radiation windows. The components of beam lines that will be supported as part of the Beamline Initiative will meet the current requirements of users to perform x-ray research investigations. Many of these beamline components, as provided through Collaborative Access Teams, have already been requested by industrial and academic users at the present time.

CONSTRUCTION PROJECT DATA SHEETS

1. Title and Location of Project	APS Beamline Initiative Argonne National Laboratory Argonne, Illinois	2. Project No. 95-CH-061

8. Brief Physical Description of Project (cont'd)

CONVENTIONAL FACILITIES: Four (4) laboratory/office modules were included in the presently funded phase of the construction project. In the new Initiative, the requirement for four (4) additional laboratory/office modules for the users of the new beamlines will be satisfied. The first-floor area of each one is composed of office space, chemistry labs, electronics labs, toilet facilities, a truck-dock air lock, compressed gas storage, reception area and work-break area. A mechanical mezzanine is located above the toilet facilities. These buildings will be located outside the Experiment Hall, adjacent to the beam lines proposed in this initiative. Existing utilities and controls will be extended to serve the additional modules. These buildings are spaced at intervals around the outside of the Experiment Hall.

9. Purpose, Justification of Need for, and Scope of Project

The Advanced Photon Source is in great demand by scientific and technological researchers from the field of physics, materials, chemistry, biology, energy, pharmaceuticals, and medicine. The new Beamline Initiative has two main goals: First, to provide standard beamline components to the technological and academic users forming Collaborative Access Teams. Second, to support the unexpected demand for bright x-ray beams by the user community that could not be met in the funded phase of the project.

The APS Beamline Initiative reflects the need for the ultra-bright x-ray beams from industrial and academic users. Applications continue to increase and they span a wide variety of scientific disciplines; for example, from studies of biological cells to structure of drugs to non-evasive diagnostics of the human heart, from physical sciences to environmental sciences. In order to effectively exploit this national scientific resource, the complement of instrumentation and laboratory space proposed here to support users must be provided.

The importance of this facility for industrial competitiveness of the U.S. is clear. The European countries have jointly built a facility in Grenoble, France, which is similar to the 6-7 GeV Synchrotron Radiation Source being built at Argonne. The Japanese are building a facility in Nishi-Harima which is larger than the APS Project even when the new Beamline Initiative is completed.

CONSTRUCTION PROJECT DATA SHEETS

1. Title and Location of Project	APS Beamline Initiative Argonne National Laboratory Argonne, Illinois	2. Project No. 95-CH-061

10. Details of Cost Estimate: (dollars in thousands)

A. 1. Engineering, design and inspection at 7.90% of construction costs, Item B. (1 & 2)[a]	$ 4,000
2. Construction Management costs at 3.13% of construction costs, Item B. (2)[a]	350
B. Construction costs	
1. Technical Components	40,155
2. Conventional Facilities	11,515
C. Contingency (10.5%)	5,880
D. Overhead (@5% of Cost)	3,100
Total Construction Costs	$65,000

11. Method of Performance

Customary accepted practice will be followed. The conventional facilities will be constructed under a fixed-price design and build contract awarded in accordance with established DOE-approved procedures. The design of technical components will be performed by the Laboratory. To the extent feasible, construction and other procurements will be by means of fixed-price contracts awarded on the basis of competitive bidding.

[a]Exclusive of Project Management costs included in lines B1 and B2.

CONSTRUCTION PROJECT DATA SHEETS

1. Title and Location of Project — APS Beamline Initiative, Argonne National Laboratory, Argonne, Illinois

2. Project No. 95-CH-061

	FY 95	FY 96	FY 97	FY 98	FY99	Total
12. Funding Schedule of Project						
A. Total Project Funding						
1. Total facility costs						
(a) Construction line item	$2,500	$18,000	$28,500	$14,000	$2,000	$65,000
(b) Expense funded equipment	0	0	0	0		
(c) Inventories	0	500	500	0		1,000
2. Other project funding						
(a) R&D necessary to complete construction	1,000	1,500	500	0		3,000
(b) Other project related costs[a]	0	0	2,000	4,000		6,000
(c) Capital Equipment	1,000	1,000	4,000	6,000		12,000
(d) Conceptual design costs	0	0	0	0		0
Total Project Costs	$4,500	$21,000	$35,500	$24,000	$2,000	$87,000

[a]/See Section 12.b for annual operating costs required in FY 1999.

CONSTRUCTION PROJECT DATA SHEETS

1. Title and Location of Project	APS Beamline Initiative Argonne National Laboratory Argonne, Illinois	2. Project No. 95-CH-061

12. Funding Schedule of Project (cont'd)

B. Other Related Annual Costs[a/] (estimated life of project: 20 years)

1. Facility Operating Cost	$ 800
2. Programmatic Research	3,100
3. ES&H Cost	200
4. Maintenance Cost	210
5. Capital Equipment Related to Programmatic Research	8,000
Total Related Annual Costs	$12,310

[a/]Estimated costs shown are incremental to annual costs shown in Project No. 89-R-402 and are in thousands, escalated to Fiscal Year 1999 dollars.

CONSTRUCTION PROJECT DATA SHEETS

1. Title and Location of Project	APS Beamline Initiative Argonne National Laboratory Argonne, Illinois	2. Project No. 95-CH-061

13. Narrative Explanation of Total Project Funding and Other Related Funding Requirements

A. Total project funding

1. Total Facility costs

(a) Construction line item - no narrative required.
(b) Inventories

2. Other project funding

(a) R&D necessary to complete construction.
These costs represent the R&D and capital equipment necessary to assure the best possible performance of the facility, to optimize conceptual engineering designs, and to develop the quality-assurance plans for testing of all hardware. The R&D plan includes development of front-end components and standard components of the beam lines and the optics, which will perform efficiently in handling the radiation power from insertion devices. The state-of-the-art research identified during phase-1 operation will require major R&D to implement instruments during Beamline Initiative.

(b) Other project-related costs
These costs provide support for staff, utilities, management, start-up, commissioning, operations and operations-related R&D.

B. Total related funding requirements

1. Facility operating costs - The major elements comprising the facility operating costs are electricity, space and custodial costs, and other service and management effort required to operate the facility.

2. Programmatic Research - Continuing R&D is required to develop standard beam-line components, and safety engineering to provide greater capability to fully implement this scientific resource.

3. ES&H Costs - The additional beam-line facilities will require increased safety coverage.

CONSTRUCTION PROJECT DATA SHEETS

1. Title and Location of Project	APS Beamline Initiative Argonne National Laboratory Argonne, Illinois	2. Project No. 95-CH-061

13. Narrative Explanation of Total Project Funding and Other Related Funding Requirements (cont'd)

B. Total related funding requirements (cont'd)

4. Maintenance Costs - Maintenance of the additional user modules and experimental equipment is estimated to increase from approximately 2.5% of the annual operating costs in FY 1999 to approximately 7% of the annual operating cost by FY 2003.

5. Capital Equipment Related to Programmatic Research - The continuing R&D program to improve the quality of the facilities available to scientific users will require adding, upgrading or replacement of scientific equipment.

14. Incorporation of Fallout Shelters

Adequate Argonne fallout-shelter space currently exists in designated fallout-shelter areas. The existing shelters can be augmented by the basement of the control laboratory and office building.

15. Federal Compliance with Pollution-Control Standards

The total cost of this project includes the cost of those measures required to assure compliance with Executive Order 12088. Sanitary waste will be discharged into existing sewers connected to adequate sewage-treatment facilities. Airborne contaminants will be collected and filtered from exhaust air.

16. Evaluation of Flood Hazards

This project will be located in an area not subject to flooding as determined in accordance with Executive Order 11988.

CONSTRUCTION PROJECT DATA SHEETS

1. Title and Location of Project	APS Beamline Initiative Argonne National Laboratory Argonne, Illinois	2. Project No. 95-CH-061

17. Environmental Impact

Beamline of the APS was included within the project conceptual-design basis used for the Environmental Assessment (DOE/EA-0389) for the 6-7 GeV Synchrotron Radiation Source (Project No. 89-R-402). This project complies with all provisions of the National Environmental Policy Act and other related DOE orders and guidelines protecting the environment. Based on the Environmental Assessment (DOE/EA-0389) a Finding of No Significant Impact notice was published in the Federal Register, Vol. 55, No. 95 (5/16/90) for the 6-7 GeV Synchrotron Radiation Source.

18. Accessibility for the Handicapped

The project will be accessible to the handicapped in accordance with the Architectural Barriers Act, Public Law 90-480, and implementing instruction in the Federal Property Management Regulations (41 CFR 101.19.6).

19. Facility Utilization

See attached.

20. Safe and Healthful Work Place

Cost estimates for this project include direct funding of safety-coordination activities required to conduct construction operations consistent with the standards promulgated under Section 19 of the Occupation Safety and Health Act of 1970, Executive Order No. 12196, and related federal regulations. Specific construction of all safety systems as described in the Preliminary Safety Analysis Report for this project approved by DOE in February 1990 are also included in the project estimates. Annual ES&H operating costs are included in the estimate presented in Section 12.3.

21. Compliance with Energy Conservation Criteria

The APS laboratory/office modules have been designed in accordance with the criteria set forth in DOE Order 6430.1A that allows use of either 10CFR435 or ASHRAE standard 90, and project costs include the cost of complying with the latter standard.

The APS project Energy Conservation Report of March 1990 addressed all project buildings including the four laboratory/office modules presently funded and the four additional modules represented in this initiative. The report was submitted by DOE-AAO to DOE-HQ April 17, 1990.

In order to minimize impact on occupied space, construction of the utility feeder systems for all eight laboratory/office modules was initiated prior to the Secretary's memorandum of November 12, 1991. It was therefore determined by DOE-AAO that the requirement for Private Sector Energy Expert review called for in the Secretary's memorandum was not required.

June 3, 1993

Supplementary Project Data

FACILITY UTILIZATION

Title and Location of Project — Project No. 95-CH-061

Site-wide Requirements/Assets for CATEGORY 721: Physics Laboratories

Other Projects Affecting this Category: 89-R-402

UTILIZATION OF EXISTING ASSETS (FACILITIES) IN THIS CATEGORY:

A. Total requirement for this category:	667,575	SF
B. The total existing assets in this category*:	578,375	SF
C. Less amount of existing, substandard assets:	0	SF
D. Equals amount of existing, adequate assets:	578,375	SF
E. Existing adequate assets, less total requirement for this category equals excess/(deficiency) of adequate assets:	(89,200)	SF

CHANGES TO ASSET LEVELS RESULTING FROM THIS PROJECT:

F. The additional assets created in this category by the project:	89,200	SF
G. Less, assets removed from this category by the project through excessing, demolition, etc.:	0	SF
H. Equals, net increase/(decrease) of assets in this category due to the project:	89,200	SF

PROJECTED ASSET STATUS AFTER COMPLETION OF THIS PROJECT:

I. Existing excess or (deficiency) of adequate assets, plus this project's increases, equal excess or (deficiency) of adequate assets projected for this category:	0	SF

*See Project 89-R-402

Distribution for ANL-93/18

Internal:

Y. Cho
J. Galayda
D. Getz
D. Moncton
G. Shenoy (71)
B. Sproule
E. Temple
APS Document Control Center (2)
TIS Files

External:

DOE-OSTI, for distribution per UC-411 (34)
DOE Chicago Field Office:
Manager
ANL-E Libraries (2)
ANL-W Library

University of Chicago Board of Governors for Argonne National Laboratory,
Committee to Advise the Laboratory Director on APS Construction (7)