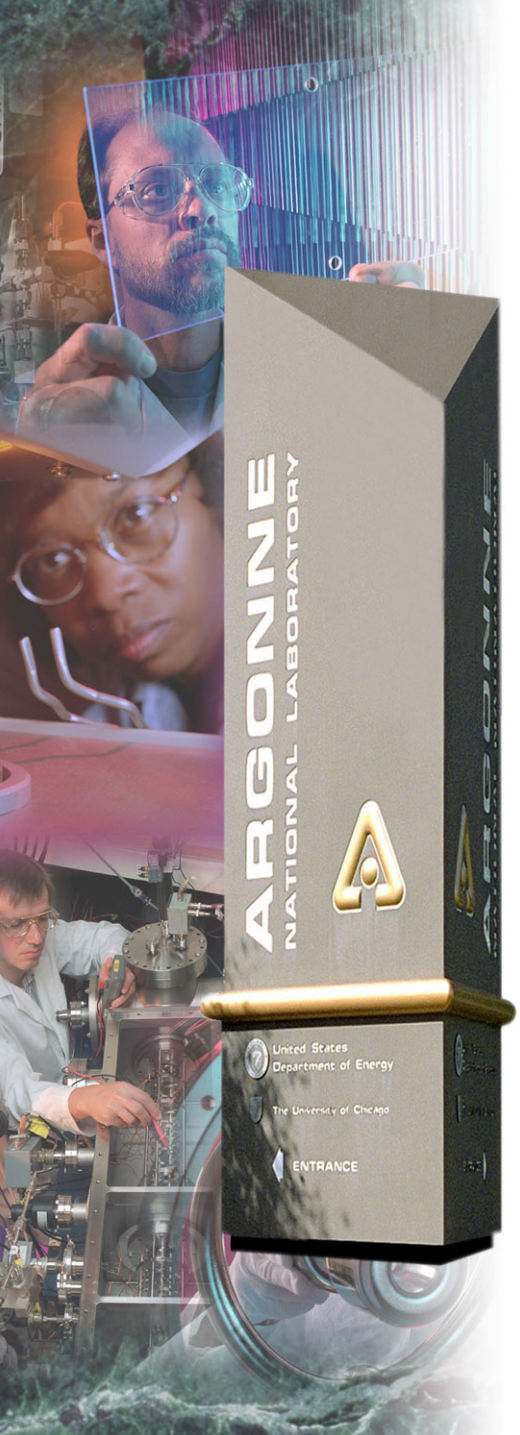

Present Limitations - Beam Position Limit Detection System

Singh/Pietryla/Bui

7/9/2004

Argonne National Laboratory

Office of Science
U.S. Department of Energy

A U.S. Department of Energy
Office of Science Laboratory
Operated by The University of Chicago

Purpose of DBPLD - from Pietryla's presentation

- **The Beam Position Limits Detector (BPLD) is designed to protect the Advanced Photon Source (APS) storage ring in the event of beam mis-steering.**
  - This is done by sampling the beam position both upstream and downstream of each insertion device and comparing this measurement against a fixed limit. If the limit is exceeded a 1MHZ heartbeat signal is removed signaling the Machine Protection System (MPS) of the violation. There is one BPLD for each installed insertion device.

General Specifications

- **Must dump beam in < 1ms of detecting mis-steered beam**
- **Horizontal Limit: ± 2.25mm* around BPM offset**
- **Vertical Limit: ± 1.00mm* around BPM offset**

DBPLD Features

- **Four channels (BPMs) per board**
- **Two 8-bit digitizers per BPM (X and Y)**
- **Monitors BPM status (via sync signal)**
- **Monitors presence of stored beam (via AGC signal)**
- **Monitors status of insertion device gap status in fail safe manner**
  - If cable is broken or unplugged, the DBPLD interprets this as the gaps closed

Design Overview

- **Three major components comprise the DBPLD system**
  - Bergoz narrowband BPMs connected to either P0 or P1 buttons
    - *300kHz IF bandwidth*
    - *8kHz sampling (four buttons)*
    - *300 – 400μs step response*
  - DBPLD Interface card residing in the narrowband BPM chassis
    - *Buffers position signals and **sync** signal*
    - *Compares AGC to fixed threshold for **Beam Present*** signal
  - DBPLD VME card
    - *Digitizes position signals*
    - *Compares digitized position signals to independent trip limits*
      - Four separate trip limits per channel
    - *Provides 1MHz heartbeat signal to MPS system*

1 Channel Signal Block Diagram

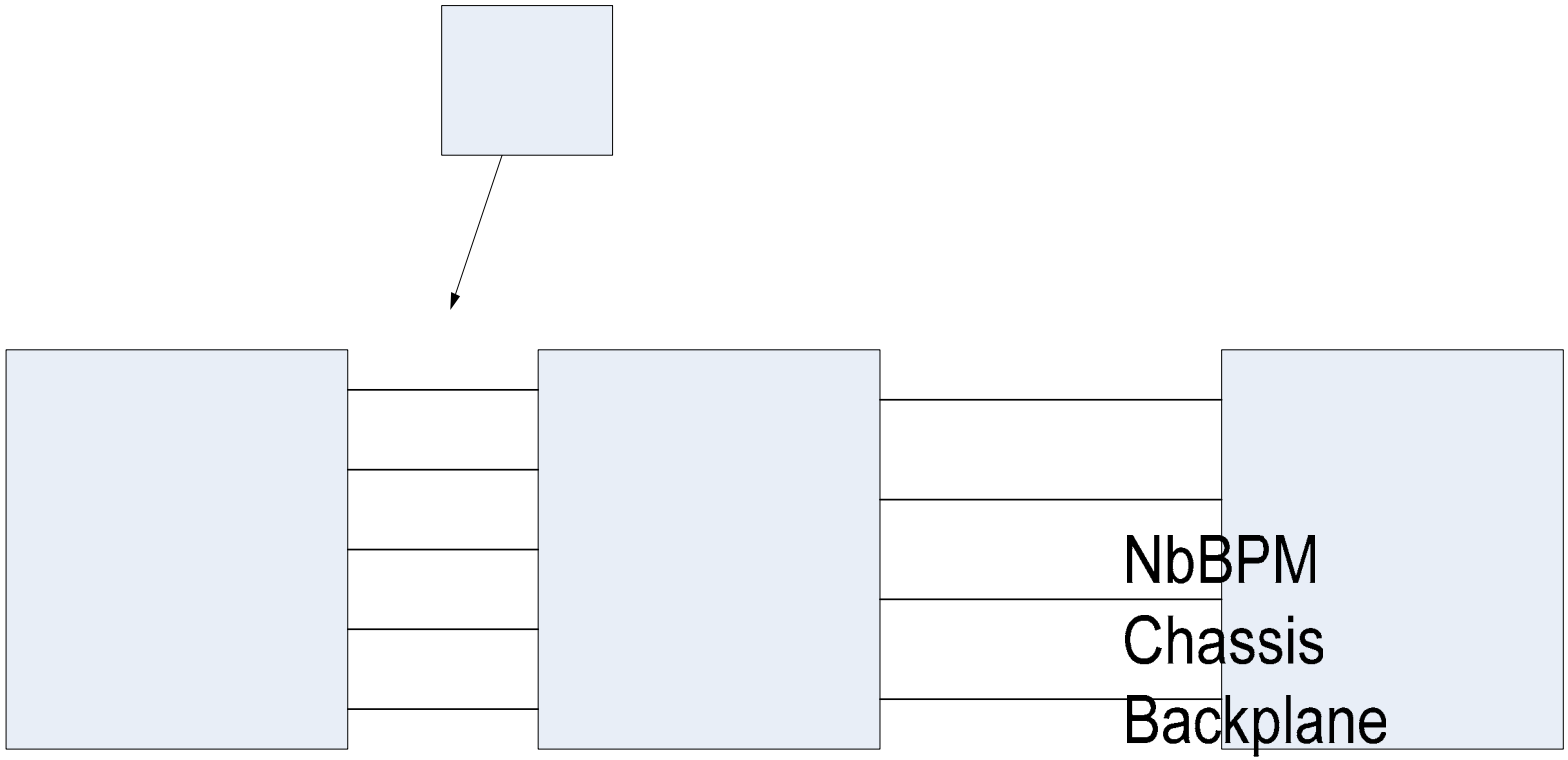

DBPLD Module Block Diagram

A. Architecture/Block Diagram

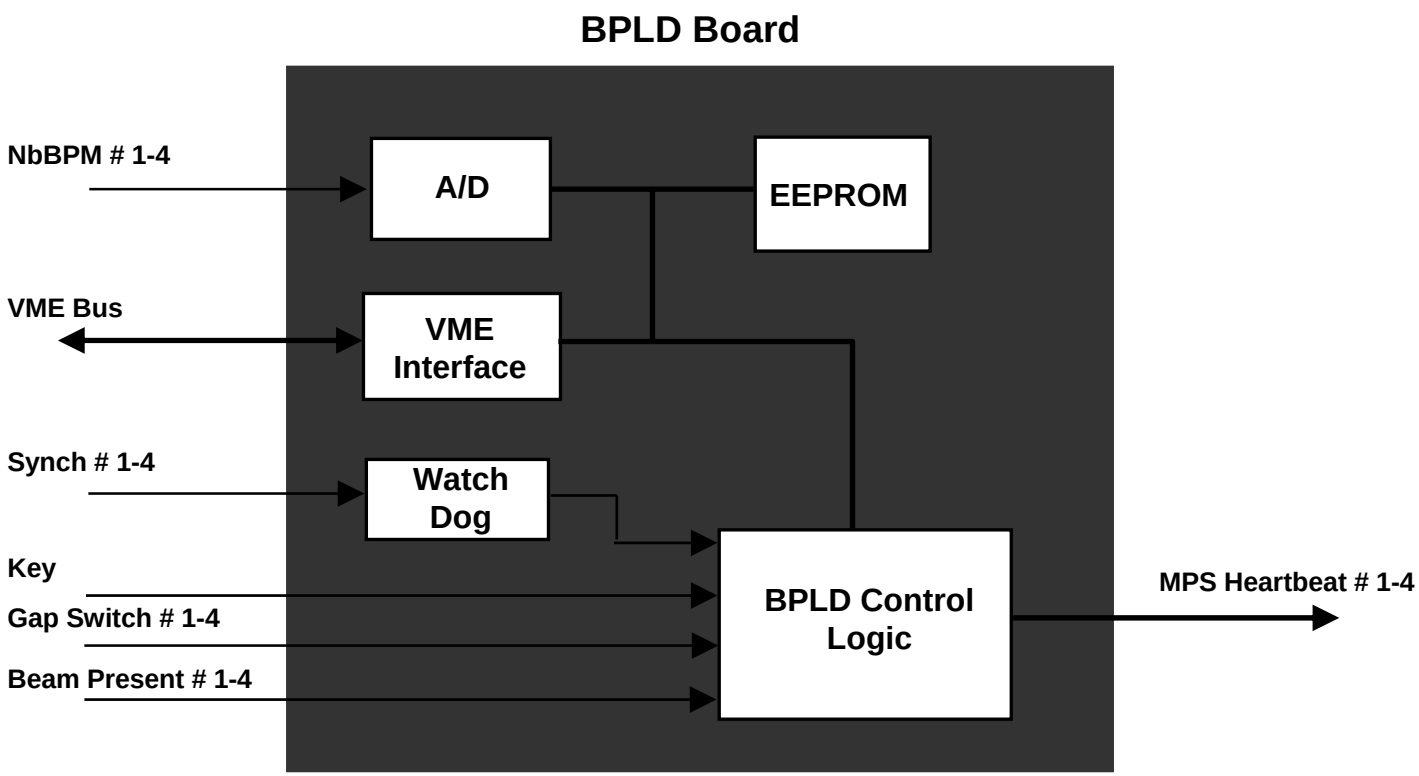

Cabling Diagram for a Double Sector

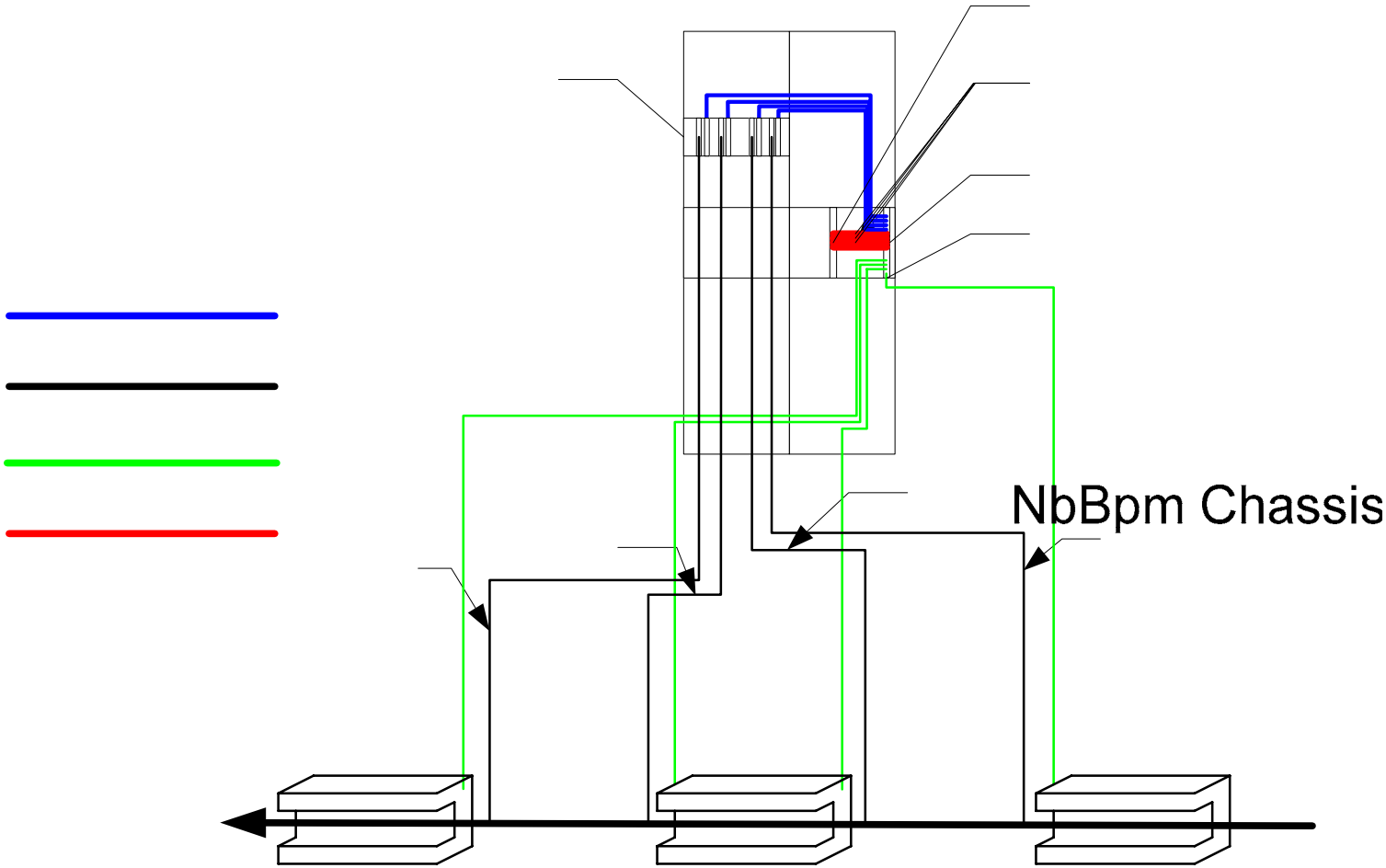

NbBpm - DBPLD
Interface cables

Decision Flow Diagram

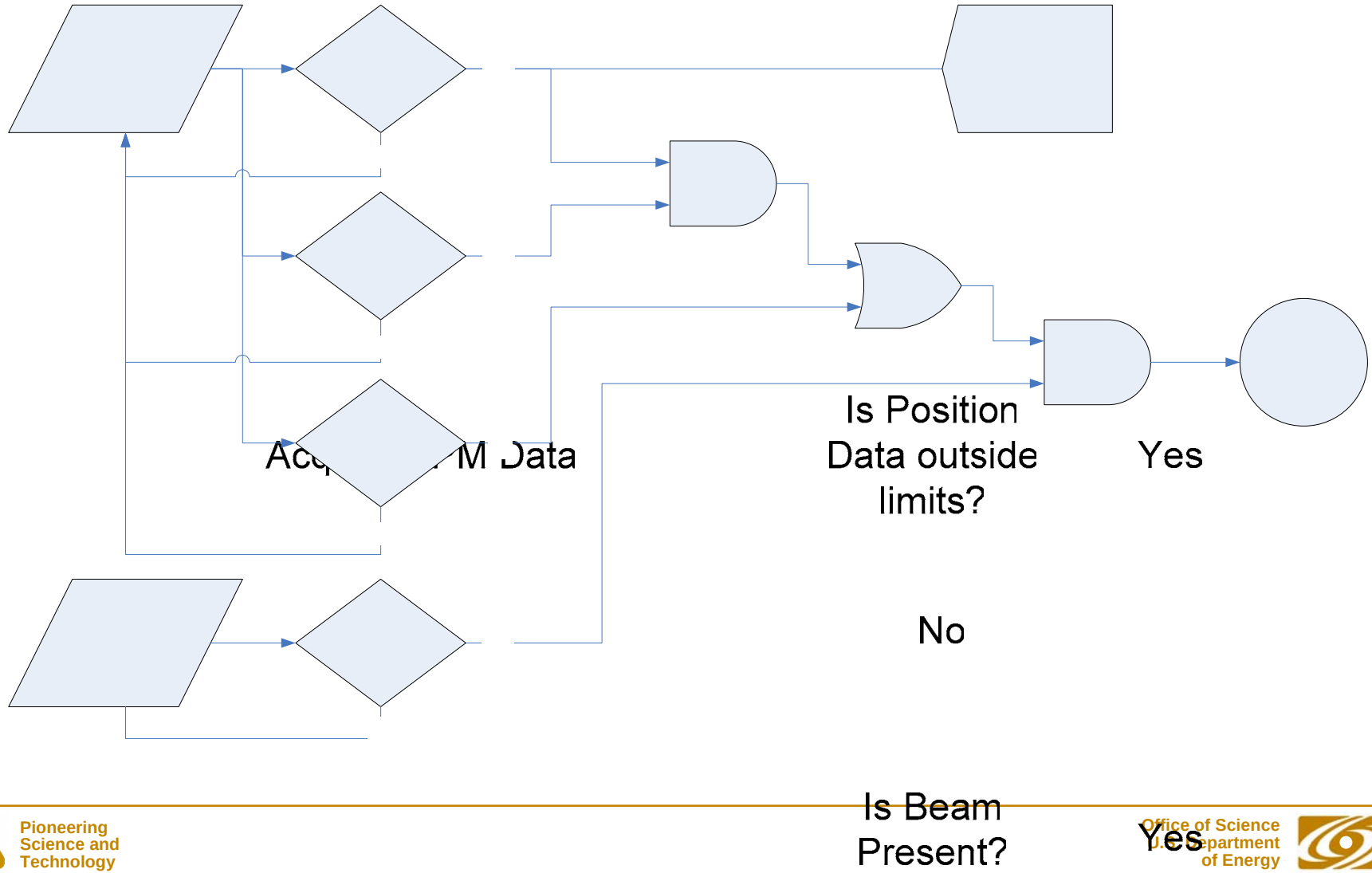

Present Limitations

- **Beam dump history for post mortem analysis**

  1. **DBPLD module was not designed for beam history data**
  2. **Available beam history with 0.65 ms logging is too slow**
  3. **Need to analyze 0.3 ms rise time nbBpm signal –**

     For example last run, power supply failure in the nbBpm crate caused such conditions and 0.65 ms data logger was not adequate to diagnose the problem. There were multiple beam dumps during this run, before problem was found and fixed.
  4. **Requires ~ 10 times data logging rate (0.065 ms)**
  5. **Implementation will require to redesign DBPLD module**
  6. **20 modules with $2-3K? each = $40-60K?**

Present Limitations - cntd

- **Lack of a "force enable" option for closed gap condition**
  1. will be trivial to implement if new board is designed
- **Trip based on angular vs position information**
  1. Will improve margin for false trips
  2. Logic implementation on the module should not be hard, but
  3. System re-configuration is required – must handle two full undulators vs present 1 full and 2 halves undulators.
  4. Reconfiguration cost of cables/drivers – ~ 20x1K = 20K
- **Remove beam present option – trivial to implement**
- **?**

Recommendation

- **?**