Flow Diagram and Equipment Locations for Primary Heating Water Diff Press Ctrl

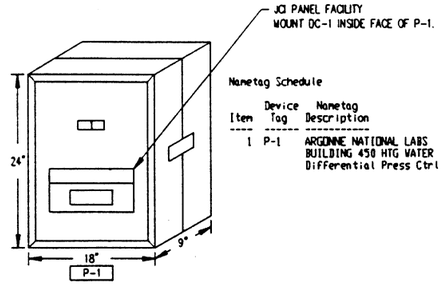

Nametag Schedule

Item	Device Tag	Nametag Description
1	P-1	ARGONNE NATIONAL LABS BUILDING 450 HTG WATER Differential Press Ctrl

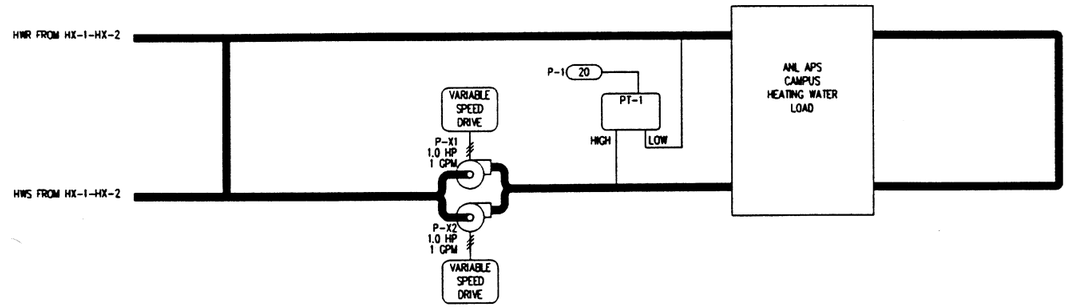

FIELD MATERIAL

DEVICE TAG	QTY	CODE NUMBER	DESCRIPTION
CS-1	2	D150-ND	CURRENT SWITCH
PT-1	1	PT-550-3-5-D	DIFFERENTIAL PRESSURE TRANSMITTER

PANEL MATERIAL

DEVICE TAG	QTY	CODE NUMBER	DESCRIPTION
(P) ACC	1	M-8000-393	SCREW-ON LANCOID NAME-
(P) ACC	32	PD-113-15	TERM SEC MINIATURE 600V
(P) ACC	5	PD-113-3	TERMINAL BLOCK; MEDIUM
(P) MS-1	1	PD-112-22	BUSS SSU FUSE HOLDER/
	1	PD-112-23	FUSE T-5 (5AMP) FOR
(P) P-1	1	M-8100-1824	CONTROL CABINET;STD. FACE
(P) R-1-R-4	4	PD-109-21	RELAY; PLUG IN 3PDT
	4	PD-101-35	SOCKET; 11PIN BLADE
(P) TX-1	1	Y64AL-2C	TRANSFORMER
(P) DC-1	1	LCP200-0	DIGITAL CONTROLLER

ANY MATERIAL WITH A (P) PRECEEDING THE DEVICE TAG IS CONSIDERED PROPRIETARY EQUIPMENT AND IS BEING SUPPLIED BY JOHNSON CONTROLS, INC. ALL OTHER MATERIAL IS NON-PROPRIETARY EQUIPMENT.

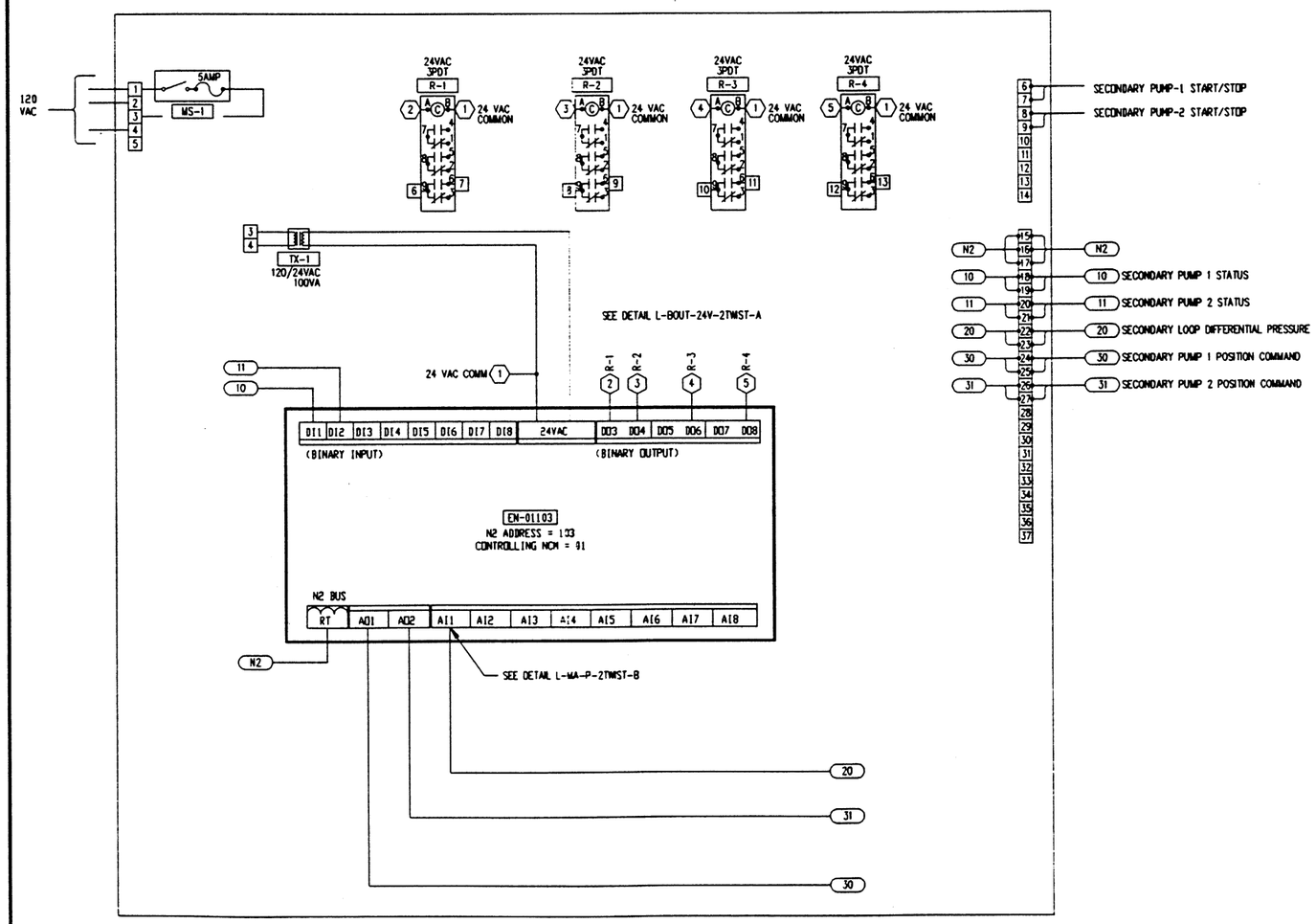

Motor Control

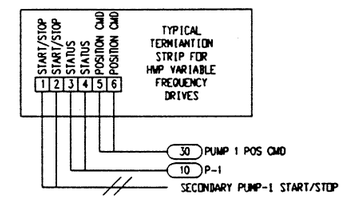

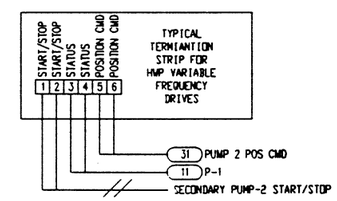

Sequence of Operations

The digital controller, EN-01103 will modulate the position of campus secondary heating water pump, P-X1 to maintain a differential setpoint of 50 PSIG(Adj.). In the event that the lead pump fails, the standby pump will be started and the lead pump disabled. An alarm will be sent to the ISC network, 'Sec HW Pump-## Failure'.

COPYRIGHT JOHNSON CONTROLS, INC.1993

FILE: 450HWDPC

DRAWING TITLE
Building 450, Utilities
Primary Heating Water Loop
Differential pressure control

REFERENCE DRAWING	NO.	REVISION-LOCATION	ECN	DATE	BY
		RECORD		05/11/94	SF
	1	GENERAL		10/16/92	SF

SALES ENGR	PROJECT MGR	APPL. ENGR	DRAWN	APPROVED
JP	SF	DCS	BY SF DATE 02/07/92	BY DATE

PROJECT
The Argonne National Labs
Advanced Photon Source Campus
9700 Cass Avenue South
Argonne, IL 60439

JOHNSON CONTROLS
Systems & Services Division
3007 WALMO ROAD
ARLINGTON HEIGHTS
ILLINOIS 60005
708/364-1500 Main
708/806-4438 Eng

CONTRACT NUMBER 91390-0009

DRAWING NUMBER 91-9-A-10A