General Exhaust Flow and Control Panel Detail

Typical of five

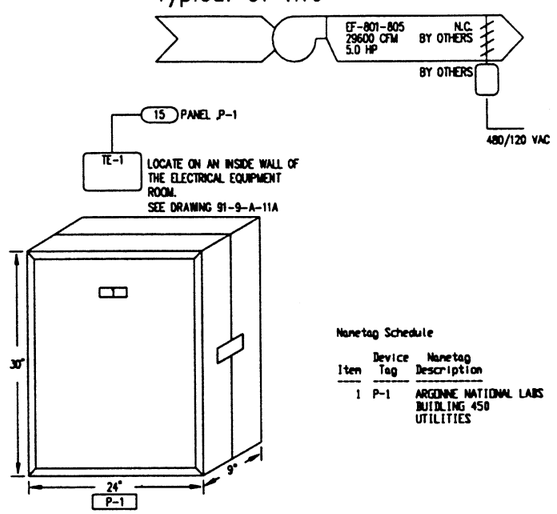

Nametag Schedule

Item	Device Tag	Nametag Description
1	P-1	ARGONNE NATIONAL LABS BUIDLING 450 UTILITIES

Typical of five sets

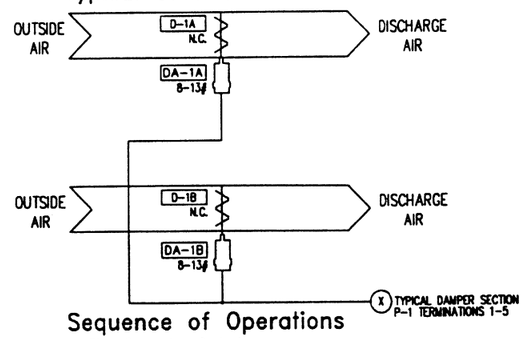

Electrical Equipment Room

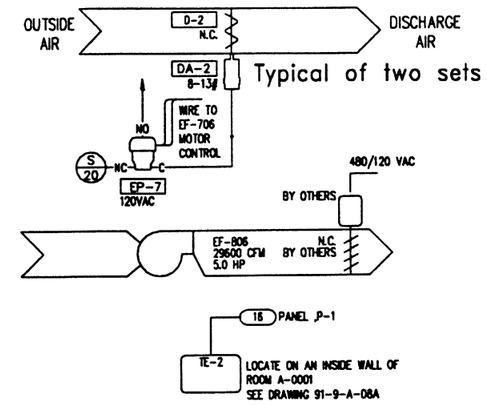

Sequence of Operations

Main Floor Temperature Control

Digital control panel, P-1 will cycle outside air dampers segements and exhaust fans in sequence to maintain a space temperature setpoint of 75 F. Control loop calculations will take place in Enclosure, EN-02001.

Electrical Equipment Room Temperature Control

Digital control panel, P-1 will cycle exhaust fan, EF-806 to maintain a space temperature setpoint of 75 F. Outside air damper operation will be interlocked with EF-806. Control loop calculations will take place in Enclosure, EN-02001.

FIELD MATERIAL

DEVICE TAG	QTY	CODE NUMBER	DESCRIPTION
D-2	1	---	SEE DAMPER SCHEDULE
DA-2, DA-1A, DA-1B	--	---	SEE DAMPER SCHEDULE
TE-1-TE-2	2	TE-6000-4	SENSOR, 1000 OHM +/- .25%
	2	T-4000-2139	COVER PLAS HRZ CONC NO-T
	2	TE-6001-4	ELEMENT HOLDER F/TE &
R-1-R-2	2	RR2B-UL	RELAY/24 VAC
ACC	2	SH2B-05	RELAY BASE

PANEL MATERIAL

DEVICE TAG	QTY	CODE NUMBER	DESCRIPTION
(P) EP-7	1	V-2410-2	VALVE, SOL.AIR, 3-WAY
(P) EP-1-EP-6	6	V-2410-8	VALVE, SOL.AIR, 3-WAY
(P) ACC	1	M-8000-393	SCREW-ON LAMCOID NAME-
(P) ACC	20	PD-113-3	TERMINAL BLOCK; MEDIUM
(P) DC-1-DC-2	2	AS-UNT100-0	UNITARY C W/O ENC 8BOLDAO
	2	Y6SAR-1C	TRANSFORMER
(P) MS-1	1	PD-112-22	BUSS SSU FUSE HOLDER/
	1	PD-112-23	FUSE T-5 (5AMP) FOR
(P) P-1	1	M-8104-2430	CONTROL CABINET;STD. FACE
(P) PI-1-PI-7	7	G-2016-5	AIR GAGE 1-1/2'
(P) R-1-R-6	6	RR2B-UL	RELAY/24 VAC

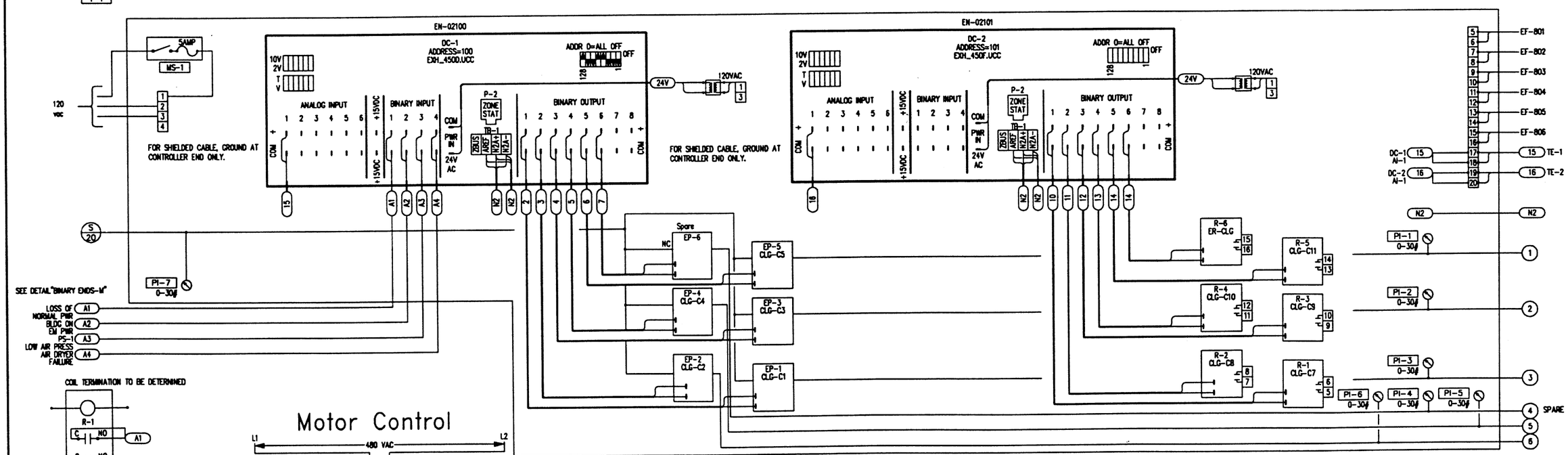

COPYRIGHT JOHNSON CONTROLS, INC.1993

DRAWING TITLE
General Exhaust System
Flow Diagram and Enclosure
Detail for EN-02100/02101

PROJECT
The Argonne National Labs
Advanced Photon Source Campus
9700 Cass Avenue South
Argonne, IL 60439

REFERENCE DRAWING	NO.	REVISION-LOCATION	ECN	DATE	BY
		RECORD		05/11/94	SF
	4	ADD ICS ALMS		11/08/92	SF
	3	GENERAL		08/08/92	SF

SALES ENGR	PROJECT MGR	APPL. ENGR	DRAWN		APPROVED	
JP	SF	DCS	BY SF	DATE 12/17/91	BY	DATE

JOHNSON CONTROLS
Systems & Services Division
3007 MALMO ROAD
ARLINGTON HEIGHTS
ILLINOIS 60005
708/364-1500 Main
708/808-4438 Eng

FILE: GEN_EXH
CONTRACT NUMBER 91390-0009
DRAWING NUMBER 91-9-A-06A