PANEL MATERIAL

| DEVICE TAG | QTY | CODE NUMBER | DESCRIPTION |
|---|---|---|---|
| VQ-1 | 1 | VQ-6100-2 | REG DC POWER SUPPLY, |
| | 1 | CZ-6002-1 | CABLE, INTERFACE |

# TOWER/BYPASS CONTROL VALVES

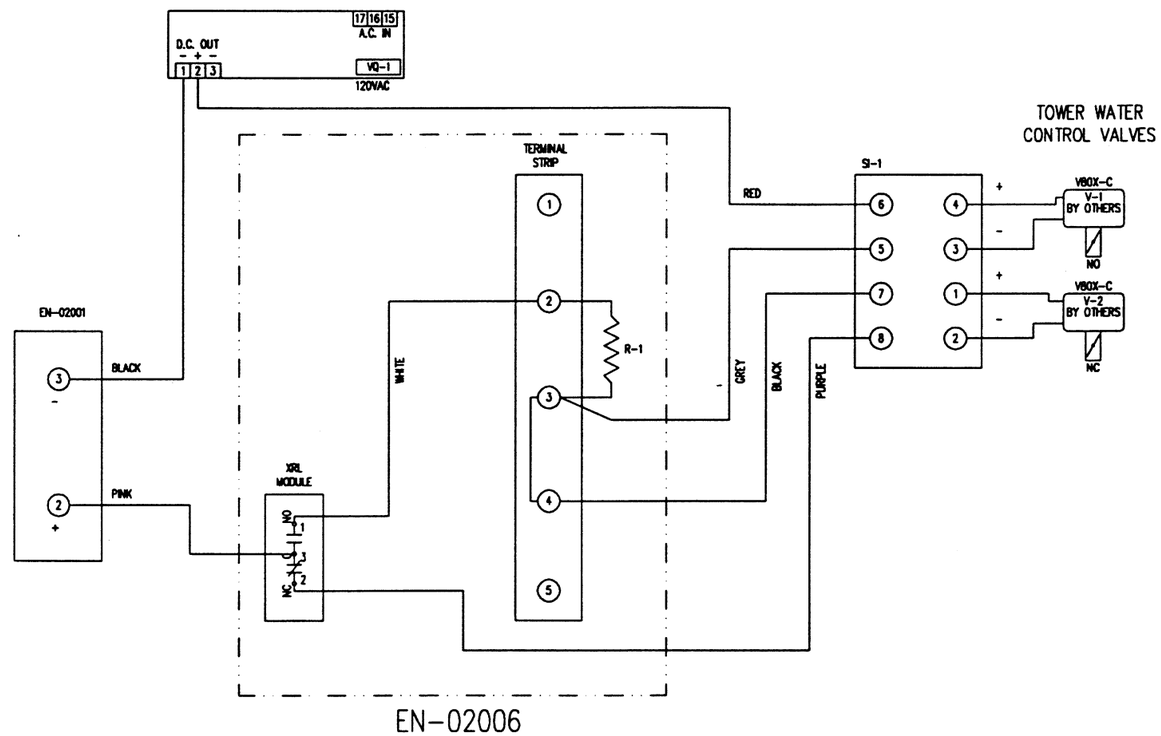


TYPICAL FOR ALL SIX(6) TOWERS.

IN CONSIDERATION OF THE RECEIPT OF THIS DOCUMENT, THE RECIPIENT AGREES NOT TO REPRODUCE, COPY, USE OR TRANSMIT THIS DOCUMENT AND/OR THE INFORMATION THEREIN CONTAINED, IN WHOLE OR IN PART, OR TO SUFFER SUCH ACTION BY OTHERS, FOR ANY PURPOSE, EXCEPT WITH THE WRITTEN PERMISSION OF JOHNSON CONTROLS, INC. AND FURTHER AGREES TO SURRENDER SAME TO JOHNSON CONTROLS, INC. UPON DEMAND.

COPYRIGHT JOHNSON CONTROLS, INC.1993

DRAWING TITLE
COOLING TOWER CONTROL VALVE
SIGNAL ISOLATION CIRCUIT

| REFERENCE DRAWING | NO. | REVISION-LOCATION | ECN | DATE | BY |
|---|---|---|---|---|---|
| | | RECORD | | 05/11/94 | PW |

| SALES ENGR | PROJECT MGR | APPL. ENGR | DRAWN | | APPROVED | |
|---|---|---|---|---|---|---|
| JP | SF | DCS | BY PW | DATE 04/11/94 | BY | DATE |

PROJECT
The Argonne National Labs
Advanced Photon Source Campus
9700 Cass Avenue South
Argonne, IL 60439

JOHNSON CONTROLS
Systems & Services Division

3007 WALMO ROAD
ARLINGTON HEIGHTS
ILLINOIS 60005
708/364-1500 Main
708/806-4438 Eng

CONTRACT NUMBER
91390-0009

DRAWING NUMBER
91-9-A-02G