DI WATER BRIDGE CONTROL DIAGRAM FOR LEUTL

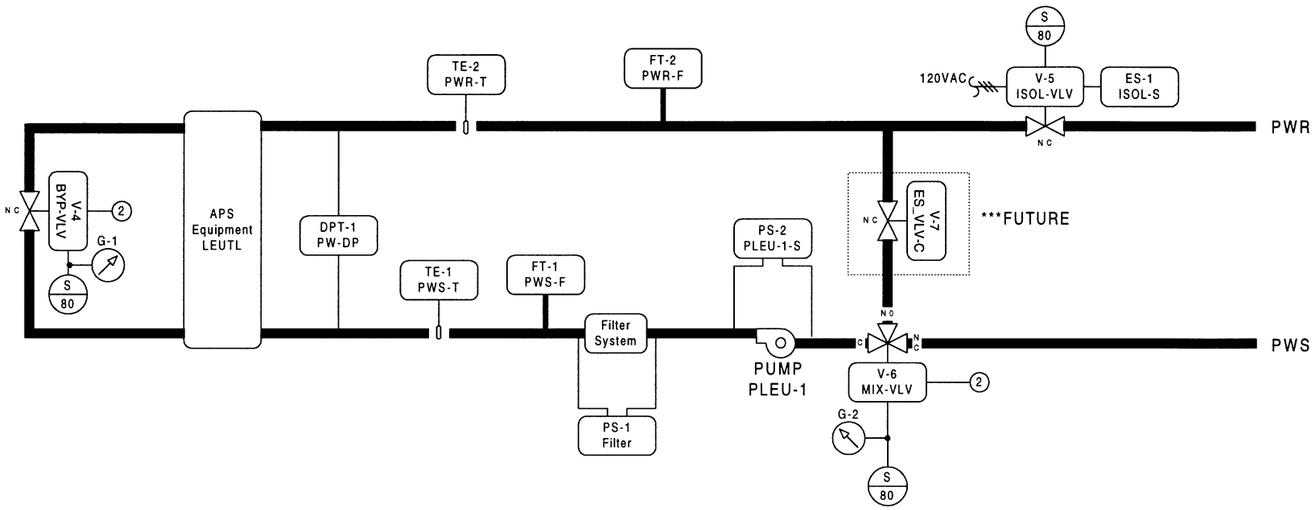

BILL OF MATERIAL

Desig.	Qty	Part #	Description
Field Devices:			
DPT-1	1	PT-550-3-7-D	Diff. Press. Tran. - MP=300psi, CP=200psi/Triad
FT-1,2	2	YF102-AAUA1A-S3	JCI-Yokogawa vortex flowmeter
G-1, G-2	2	G-2010-5	Gage,1.5",0-30 PSIG,STEM
PS-1,2	2	P74FA-5C	SW,DP,SPDT,8-60#DIF,FNPT
TE-1,2	2	AS5210TT211V600	Direct Imersion RTD w/Transmitter
V-4-6	1	SEE VALVE SCHED	
Panel Devices:			
EN-12001	1	EN-BSF201-0	Enclosure,2 Slot Baseframe
	1	EN-EWC200-0	Enclosure & Cover, NCU, 2 SLOT
	1	EN-KEY101-0	Metasys Keys, Master
	3	FM-IBN101-0	Function Module 2 BIN INPUT
	5	FM-IUN102-0	Function Module UNIV INPUT
	1	FM-KIT127-0	Function Module BLANKOFFS
	2	FM-OAP121-0	Function Module E/P Output (DCM 1SLT)
	2	FM-ORL101-0	Function Module Latch Relay Output
	1	NU-DCM140-0	Digital Control Module
	1	NU-NCM201-1	Network Controller W/N1 & NIM206
	2	NU-PWR101-0	Power Supply (NCU/NEU)
G-3, G-4	2	G-2010-5	Gage,1.5",0-30 PSIG,STEM

MOTOR STARTER CIRCUIT FOR PLEU-1

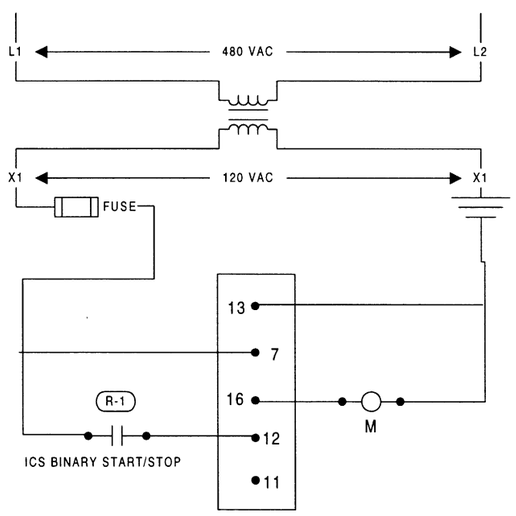

WIRING DIAGRAM FOR NCM-200

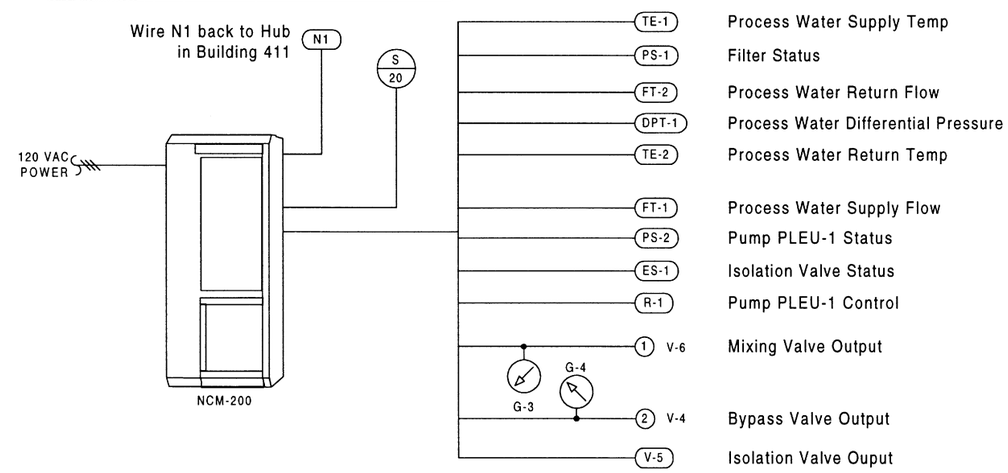

ISSUE	Drawing Title					
NUMBER A	DI Water Bridge Control Diagram For LEUTL	1	As Built		06/2/98	pmw
DATE 06/03/98		REFERENCE DRAWING	NO.	REVISION-LOCATION	ECN	DATE / BY
TIME 11:26 AM	Project Title	Sales Engineer J.P. / Project Manager D.S. / Application Engineer B.L.	DRAWN BY B.L. DATE 3/20/97	APPROVED BY AAA DATE MM/DD/YY		
FILE NAME Leutldi.vsd	Low Energy Undulator Test Line (Bldg. 413)	JOHNSON CONTROLS Systems & Services Division	Branch Information: Johnson Controls, Inc. 3007 Malmo Dr. Arlington Hts, IL 60005 (847)364-1500	CONTRACT NUMBER 7010-1001	DRAWING NUMBER 7010-1001-1	