Supply Fan, SF-101 and Exhaust Fans, EF-102-103 Flow Diagram

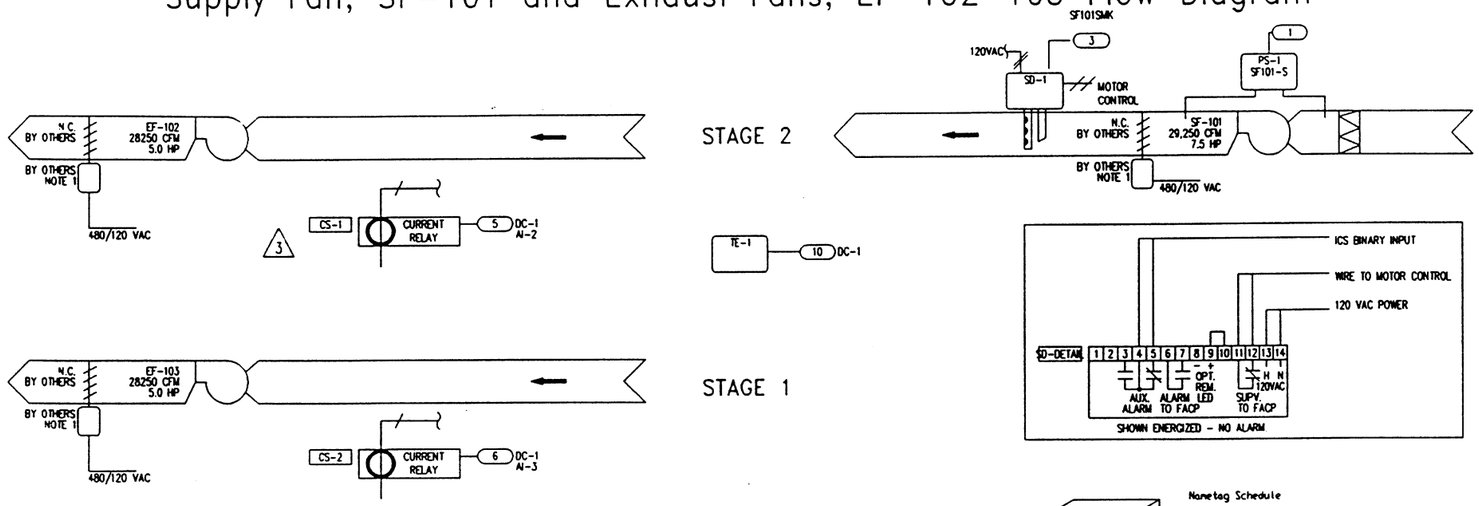

FIELD MATERIAL

DEVICE TAG	QTY	CODE NUMBER	DESCRIPTION
PS-1,PS-3-4	3	P32AF-2C	SENSITIVE DIFF PRES CTL
	6	FTG18A-600R	REMOTE MTD PROBE
SD-1	1	DH1851AC-2	DUCT DETECTOR, ION,
	1	ST-10	SAMPLING TUBE FOR
TE-1	1	TE-6000-4	SENSOR, 1000 OHM +/- .25%
	1	T-4000-2139	COVER PLAS HRZ CONC NO-T
	1	TE-6001-4	ELEMENT HOLDER F/TE &
CS-1-CS-2	2	705-NO	CURRENT SWITCH-VERIS

PANEL MATERIAL

	DEVICE TAG	QTY	CODE NUMBER	DESCRIPTION
(P)	ACC	1	M-0000-393	SCREW-ON LANCOID NAME-
(P)	ACC	25	PD-113-15	TERM SEC MINIATURE 600V
(P)	ACC	10	PD-113-3	TERMINAL BLOCK; MEDIUM
(P)	DC-1	1	AS-UNT100-0	UNITARY C W/O ENC 88DLOAD
		1	Y65AR-1C	TRANSFORMER
(P)	MS-1	1	PD-112-22	BUSS SSU FUSE HOLDER/
		1	PD-112-23	FUSE T-5 (5AMP) FOR
(P)	P-1	1	M-8100-1218	CONTROL CABINET;STD. FACE
(P)	R-1	2	PD-XXX-XX	RH3B-UL,24VAC

ANY MATERIAL WITH A (P) PRECEEDING THE DEVICE TAG IS CONSIDERED PROPRIETARY EQUIPMENT AND IS BEING SUPPLIED BY JOHNSON CONTROLS, INC. ALL OTHER MATERIAL IS NON-PROPRIETARY EQUIPMENT.

Enclosure, EN-10107, Digital ASC for Room A100 Ventilation

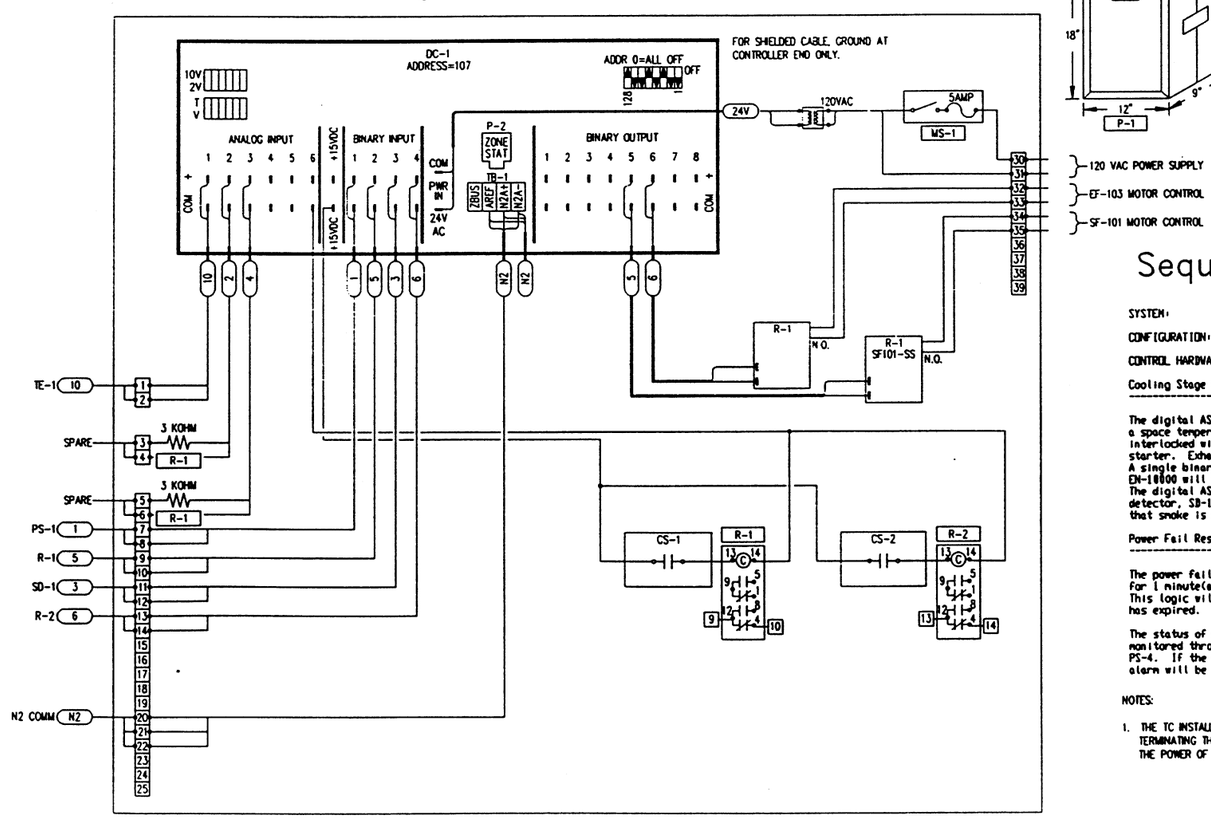

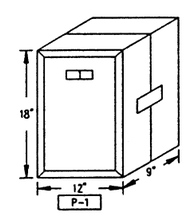

Nametag Schedule

Item	Device Tag	Nametag Description
1	P-1	ARGONNE NATIONAL LABS ROOM A100 VENTILATION ICS ENCLOSURE

Sequence of Operations

SYSTEM: Supply and Exhaust Fans, Constant Volume

CONFIGURATION: Two(2) Stages of Exhaust Cooling

CONTROL HARDWARE: AS-UNT100

Cooling Stage Sequencing

The digital ASC controller, EN-10107 will cycle Supply Fan, SF-101 to maintain a space temperature setpoint of 75 F.(Adj.) Exhaust Fan, EF-102 will be interlocked with supply fan, SF-101 through an auxillary contact on the motor starter. Exhaust Fan, EF-103 will be started manually from any ICS terminal. A single binary command, SHUTDOWN from the higher level digital controller, EN-10000 will disable the operation of the supply and exhaust fans if needed. The digital ASC controller will monitor the normally closed contact on smoke detector, SD-1 and will send an alarm to the ISC network in the event that smoke is detected in any of the supply fan discharges.

Power Fail Restart

The power fail restart will delay the startup of the digital controller for 1 minute(adjustable) after a power failure for controller reset condition. This logic will hold the controller in the sutdown mode until the restart timer has expired.

The status of supply fan, SF-101 and exhaust fans, EF-102 - EF-103 will be monitored through sensitive differential pressure switches, PS-1, PS-3 and PS-4. If the status does not match the controller command, a device failure alarm will be issued.

NOTES:

1. THE TC INSTALLATION CONTRACTOR IS RESPONSIBLE FOR TERMINATING THE EXHAUST FAN DAMPER MOTOR TO THE POWER OF THE EXHAUST FAN MOTOR.

Motor Control

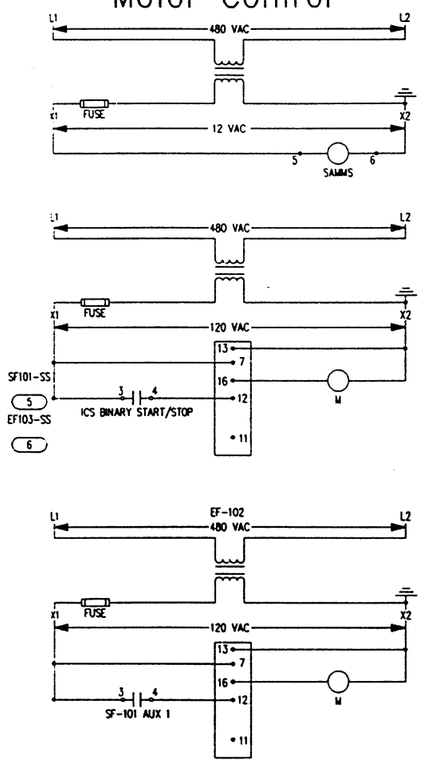

COPYRIGHT JOHNSON CONTROLS, INC.1993

DRAWING TITLE: Supply Fans, SF-101, SF-102 Exhaust Fans, EF-102, EF-103 Flow Diagram and Digital ASC Detail, Enclosure, EN-10107		AS BUILTS		06/28/94 DCS
	3	GENERAL		09/11/92 SF
	2	DEL SF-102		06/15/92 SF
REFERENCE DRAWING	NO.	REVISION-LOCATION	ECN	DATE BY

SALES ENGR: - | PROJECT MGR: SF | APPL. ENGR: DCS | DRAWN: BY SF DATE 11/22/91 | APPROVED: BY DATE

PROJECT: The Argonne National Labs, Advanced Photon Source Campus, 9700 Cass Avenue South, Argonne, IL 60439

JOHNSON CONTROLS, Systems & Services Division, 3007 MALMO ROAD, ARLINGTON HEIGHTS, ILLINOIS 60005, 708/364-1500 Main, 708/806-4438 Eng

CONTRACT NUMBER: 91390-0009

DRAWING NUMBER: 91-9-B-07A

FILE: SF-101, DCODE: 19930628.1621