Heating/Ventilating Unit, HV 301 flow Diagram and Equipment Locations

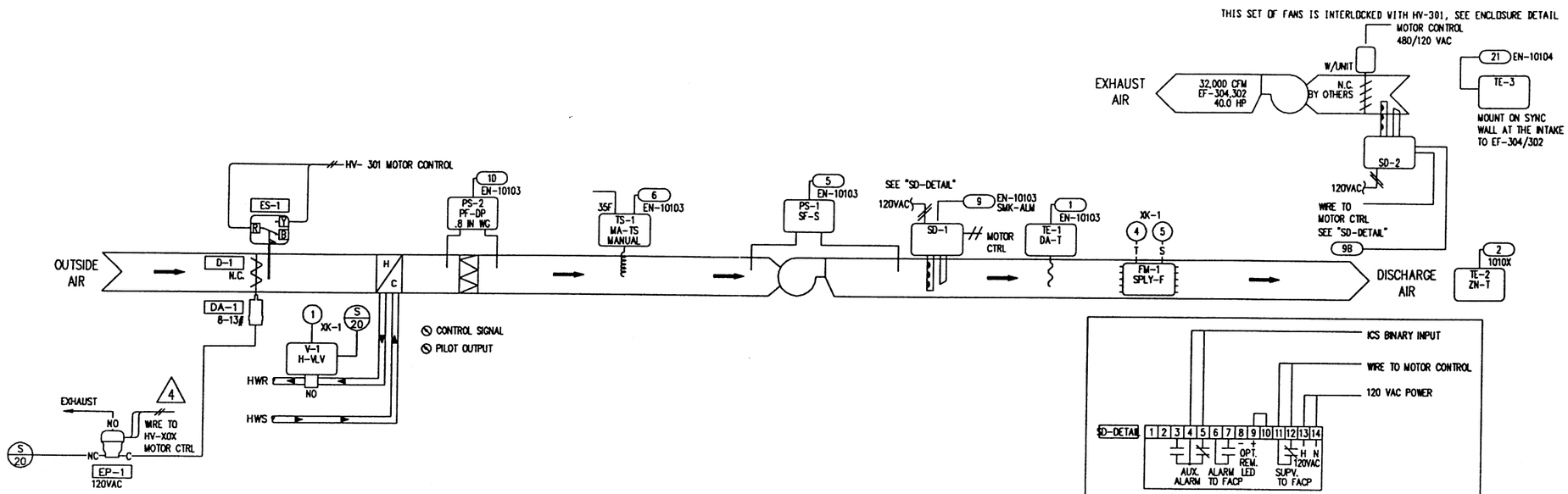

FIELD MATERIAL

DEVICE TAG	QTY	CODE NUMBER	DESCRIPTION
ACC	2	G-2010-5	AIR GAGE 1-1/2"
D-1-D-2	-	---	SEE DAMPER SCHEDULE
DA-1	-	---	SEE DAMPER SCHEDULE
EP-1	1	V-2410-2	VALVE, SOL.AIR, 3-WAY
ES-1	1	802T-CWP	END SWITHC-A/B
TE-2,3	2	TE-6000-4	RTD
	2	T-4000-2139	COVER
	2	TE-6001-4	MOUNTING HARDWARE
PS-1	1	P32AF-2C	SENSITIVE DIFF PRES CTL
	2	FTG18A-600R	REMOTE MTD PROBE
SD-1	2	DH1851AC-2	DUCT DETECTOR, ION,
	2	ST-10	SAMPLING TUBE FOR
TE-1	1	TE-6100-1	TEMP SENSING ELEMENT 17'
TS-1	1	A70HA-1C	TEMP CONTROL 2 WIRE, 2-C
V-1	-	----	SEE VALVE SCHEDULE

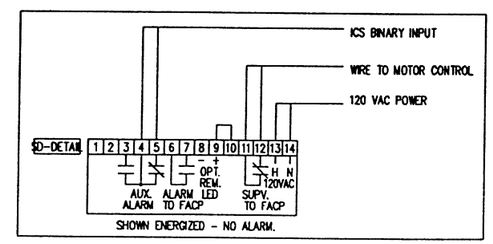

Motor Control

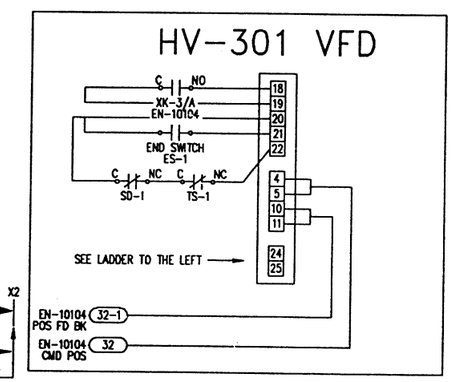

Sequence Of Operations

SYSTEM: 100 Percent Outside Air Constant Volume Air Handling Unit HV-301

CONFIGURATION: Constant Discharge Air Setpoint
Constant air supply and exhaust fans

Discharge Air Temperature Setpoint

The building operating engineer will set the discharge air temperature by adjusting the discharge air setpoint, DA-SP form any ISC terminal. The digital controller will modulated controlled devices as described below to maintain a fan discharge temperature of 65 F.(adjustable at any ICS terminal)

Discharge Temperature Loop

The discharge cooling deadband is added to the discharge air setpoint. This value establishes the point at which mechanical cooling begins when the controller uses proportional only control. The digital controller will continually adjust the heating command according to the controller's result of the proportional-integral heating loop calculation. The digital controller will modulate the heating control valve, V-1, until the discharge air temperature equals the setpoint. The controller will provide an output between 0 and 100 percent as the discharge air temperature travels through the proportional bands.

Fans' Status

Sensitive differential pressure switches, PS-1(supply fan) and PS-2(exhaust fan) will close upon air flow being present, this will set fan status ON. The digital AHU controller switch to normal control.

Power Fail Restart

The power fail restart will delay the startup of the digital controller for 1 minute(adjustable at the operator workstation) after a power failure for controller reset condition. This logic will hold the controller in the sutdown node until the restart timer has expired.

Electric low limit

Heating discharge low limit temperature switch, TS-1 will stop the supply fan, close the mixed air dampers and the AHU digital controller will issue an alarm to the ISC network in the event that the heating discharge temperature drops below 35 F.(Adj.)

Supply smoke detectors, SD-1 and SD-2 stop the supply or exhaust fan and the ASC controller will issue and alarm to the ISC network in the event the respective device senses smoke at the location.

Mixed air filter alarm

The mixed air filter condition will be monitored by differential pressure switch, PS-2. The switch will close in the event that the pressure drop exceeds .8 inches WG(adjustable) and an alarm will be sent to the ICS network, "Dirty Mixed air Filter".

In the event that the respective supply fan fails, as sensed by sensitive differential pressure switches, PS-1 and PS-2, or analog air flow measuring stations, the digital controller will stop the associated exhaust fan.

Fan failure will be set if the binary feed back does not match the start/stop command or the discharge flow rate drops below 85 percent of the fan's design capacity.

In the event that the discharge flow rate exceeds 110 percent of the fan's design capacity, an alarm, "High fan discharge volume" will be sent to the ISC network.

The following point objects will be adjustable from any ICS terminal:

- -Discharge air setpoint
- -Heating lockout setpoint
- -User start/stop time

The following objects will be monitored/alarned at an ISC terminal:

Fan Discharge Air Temperature
Filter Status
Supply Fan Status
Exhaust Fans, EF-302-304 Status
Smoke Detectors' Status
Supply Air Flow Rate

VARIABLE SUPPLY AND EXHAUST OPTIONS

- The building operator will enable the systen, HV-301 and select the supply fan speed from any ICS terminal.
- At selected fan speeds below 95 %, only the Exhaust Fan Dampers will open while HV-301 is operating.
- At selected fan speeds above 95 %, the Exhaust Fan will run and the Exhaust Fan Dampers will open while HV-301 is operating.

Loss of Air Flow

Upon loss of air flow as determined by sensitive differential pressure switch, PS-1 and the controlled devices will be commanded to the following states:

- Heating valve, V-1 will remain under control.

CONTROL POWER AT EXHAUST FANS, EF-302/4

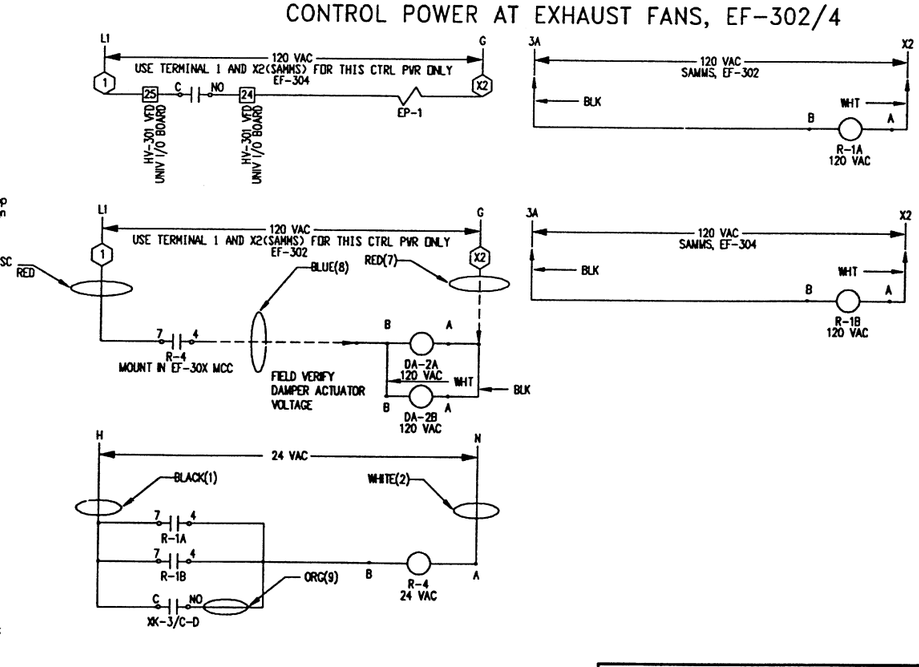

WIRING BETWEEN LINAC AND EF-30X

CONTROL WIRING WITHIN THE BLDG

COPYRIGHT JOHNSON CONTROLS, INC.1993

FILE: HV301-A.DWG

DRAWING TITLE
HEATING/VENTILATING UNIT, HV-301

REFERENCE DRAWING	NO.	REVISION-LOCATION	ECN	DATE	BY
		RECORD		02/21/95	SF

SALES ENGR	PROJECT MGR	APPL. ENGR	DRAWN		APPROVED	
JP	SF	DCS	BY SF	DATE 04/30/94	BY	DATE

PROJECT
The Argonne National Labs
Advanced Photon Source Campus
9700 Cass Avenue South
Argonne, IL 60439

JOHNSON CONTROLS
Systems & Services Division
3007 MALMO ROAD
ARLINGTON HEIGHTS
ILLINOIS 60005
708/364-1500 Main
708/806-4438 Eng

CONTRACT NUMBER 91390-0009

DRAWING NUMBER 91-9-B-03C