Digital ASCs Serving Series fan VAV Terminal Units

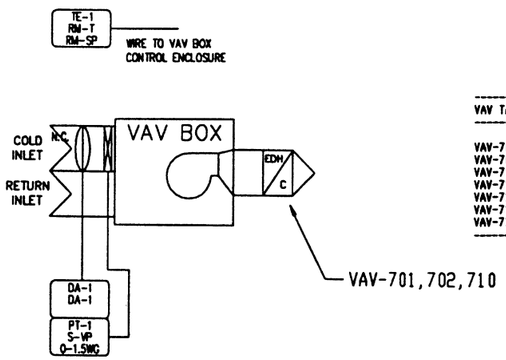

VAV Schedule

VAV BOX SCHEDULE

VAV TAG	ROOM NAME NUMBER	HTG MIN	HTG MAX	CLG MIN	CLG MAX
VAV-701	CONFERENCE ROOM	160	160	160	800
VAV-702	VEIWING AREA	500	500	500	1500
VAV-710	LOCKER RMS, C007,008	210	210	210	210
VAV-711	OFFICES, C011,012,013	100	100	100	350
VAV-713	SHOP, C014	800	800	800	2040
VAV-714	SHOP, C014	800	800	800	2290
VAV-715	SHOP, C014	100	100	100	400

Sequence of Operations

OCCUPIED MODE:

THE DIGITAL CONTROLLER WILL MODULATE VAV TERMINAL UNIT DAMPER, DA-1 TO MAINTAIN A FLOW SETPOINT ACCORDING TO THE ASC CONFIGURATION FILE INDICATED ON THE ENCLOSURE/ROOM SCHEDULE. THE FLOW SETPOINT WILL BE CALCULATED TO MAINTAIN OCCUPIED HEATING/COOLING MINIMUM AND MAXIMUM FLOW RATES AS THE SPACE TEMPERATURE TRAVELS THROUGH THE HEATING AND COOLING PROPORTIONAL BANDS. THE CONTROLLER WILL PROVIDE A DIGITAL OUTPUT TO STAGE ELECTRIC REHEAT COIL CONTROL RELAYS, R-2-R-3, INSIDE THE HEATING PROPORTIONAL BAND. BOTH CONTROLLED DEVICES, DA-1 AND R-2-R-3 WILL BE MODULATED/STAGED IN SEQUENCE TO MAINTAIN AN ACTUAL HEATING/COOLING SETPOINT. THE ACTUAL TEMPERATURE SETPOINT CAN BE ADJUSTED PLUS OR MINUS 5 F. FROM THE BASE SETPOINT, 72 F. AT TEMPERATURE ELEMENT, TE-1. THE BASE SETPOINT CAN BE ADJUSTED FROM ANY ICS OPERATOR WORKSTATION. THE SERIES BOX FAN WILL BE CYCLED PER THE BOX OCCUPIED HEATING TEMPERATURE SETPOINT.

UNOCCUPIED MODE:

VAV BOX DAMPER, DA-1 WILL BE MODULATED TO MAINTAIN A FLOW SETPOINT ACCORDING TO THE CONFIGURATION FILE. THE FLOW SETPOINT WILL BE CALCULATED TO MAINTAIN UNOCCUPIED HEATING/COOLING MINIMUM AND MAXIMUM FLOW RATES AS THE SPACE TEMPERATURE TRAVELS THROUGH THE HEATING AND COOLING PROPORTIONAL BANDS. BOTH CONTROLLED DEVICES, DA-1 AND R-X WILL BE MODULATED/STAGED IN SEQUENCE TO MAINTAIN AN UNOCCUPIED SPACE TEMPERATURE SETPOINT AS DEFINED IN THE ASC CONFIGURATION FILE. THE UNOCCUPIED TEMPERATURE SETPOINT IS ADJUSTABLE FROM ANY ICS OPERATOR WORKSTATION. THE SERIES BOX FAN WILL BE CYCLED PER THE BOX UNOCCUPIED HEATING TEMPERATURE SETPOINT.

UNOCCUPIED COOLING SETPOINT: 78 F.
UNOCCUPIED HEATING SETPOINT: 65 F.

SMOKE MODE:

ALL FAN POWERED VAV TERMINAL UNITS WILL OPERATE AT 100 PERCENT PRIMARY AIR IF THE CONTROL CENTER IS CONSIDERED A POSITIVE ZONE DURING SMOKE PURGE MODE OPERATION.

PANEL MATERIAL

	DEVICE TAG	QTY	CODE NUMBER	DESCRIPTION
(P)	ACC	57	PD-113-3	TERMINAL BLOCK; MEDIUM
(P)	DC-1	7	AS-VAV101-0	DIGITAL ASC VAV CONTROLLER
(P)	DA-1	7	ATP-2040-12	ACTUATOR/TRANSMITTER PACKAGE

S/C-212 PANEL MATERIAL

DEVICE TAG	QTY	CODE NUMBER	DESCRIPTION
R-1	6	RH4(24VAC)	4PDT 24 VAC RELAY WITH LIGHT-IDEK
ACC	6	RH4B	RELAY BASE-IDEK

FIELD MATERIAL

	DEVICE TAG	QTY	CODE NUMBER	DESCRIPTION
(P)	TE-1	7	TE-6410S-1010	WALL MOUNTED NI TEMP ELEMENT W/SP ADJ.

ANY MATERIAL WITH A (P) PRECEEDING THE DEVICE TAG IS CONSIDERED PROPRIETARY EQUIPMENT AND IS BEING SUPPLIED BY JOHNSON CONTROLS, INC. ALL OTHER MATERIAL IS NON-PROPRIETARY EQUIPMENT.

Reheat Control

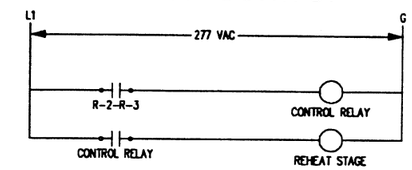

Motor Control

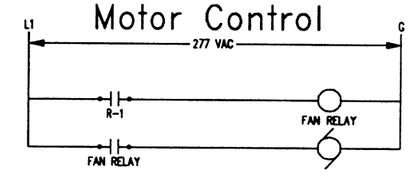

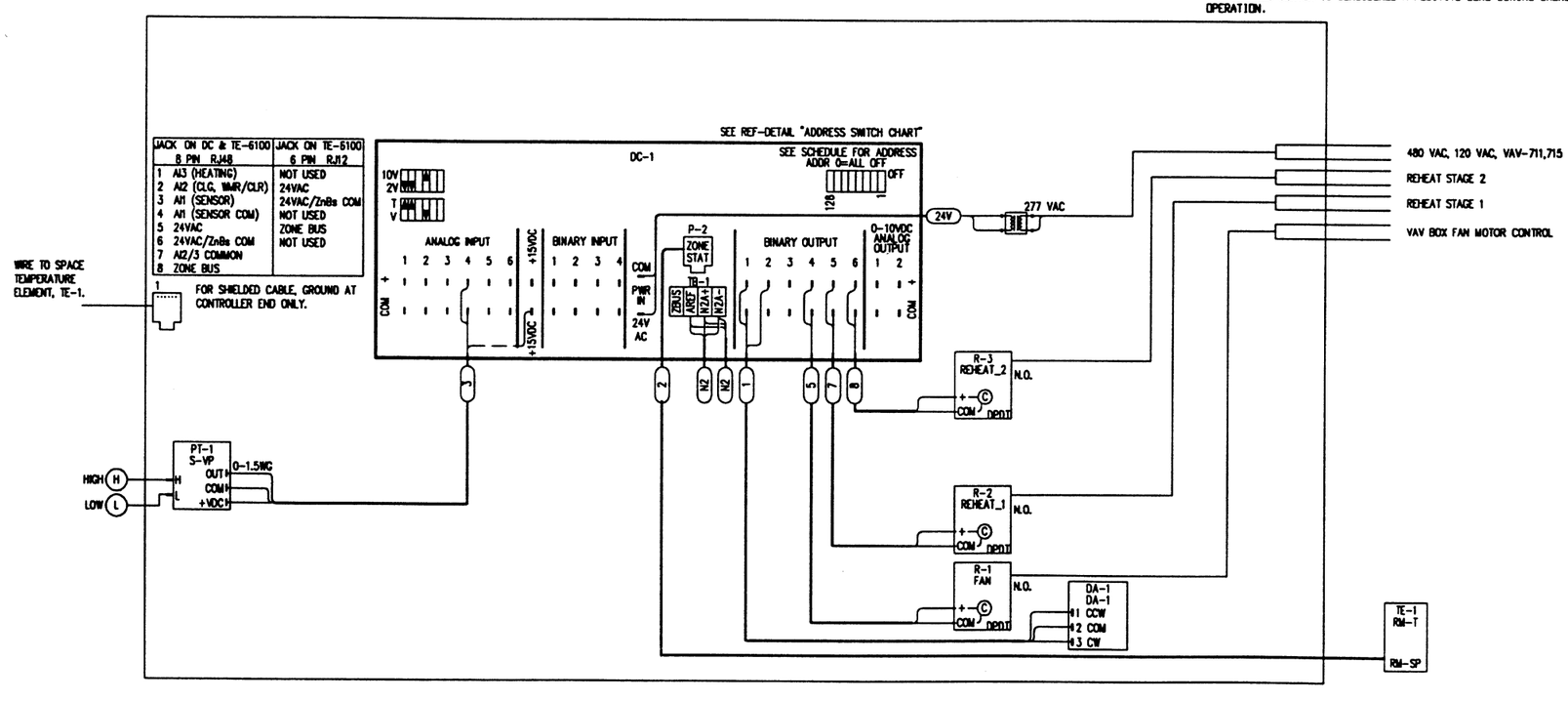

VAV BOX CONTROLLER ENCLOSURE LAYOUT

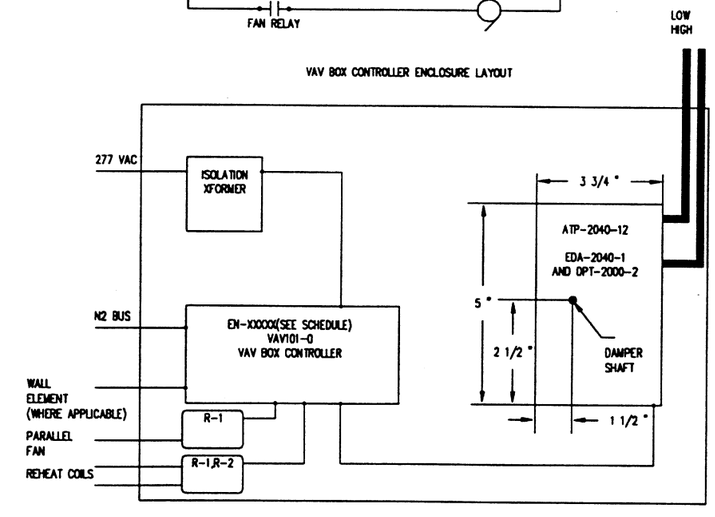

COPYRIGHT JOHNSON CONTROLS, INC.1993

DRAWING TITLE: Series Fan Variable Air Volume Terminal Units W/Electric Reheat				FILE: 410CVAV DCODE: 199X0808.1009
			RECORD	08/08/94 SF
		2	CC REVISONS	03/31/93 SF
		1	GENERAL	02/11/92 SF
REFERENCE DRAWING	NO.		REVISION-LOCATION	ECN DATE BY
SALES ENGR JP	PROJECT MGR SF	APPL. ENGR DCS	DRAWN BY SF DATE 11/23/91	APPROVED BY DATE
PROJECT: The Argonne National Labs, Advanced Photon Source Campus, 9700 Cass Avenue South, Argonne, IL 60439	JOHNSON CONTROLS Systems & Services Division		3007 MALMO ROAD, ARLINGTON HEIGHTS, ILLINOIS 60005, 708/364-1500 Main, 708/808-4438 Eng	CONTRACT NUMBER 91390-0009
				DRAWING NUMBER 91-9-C-05D