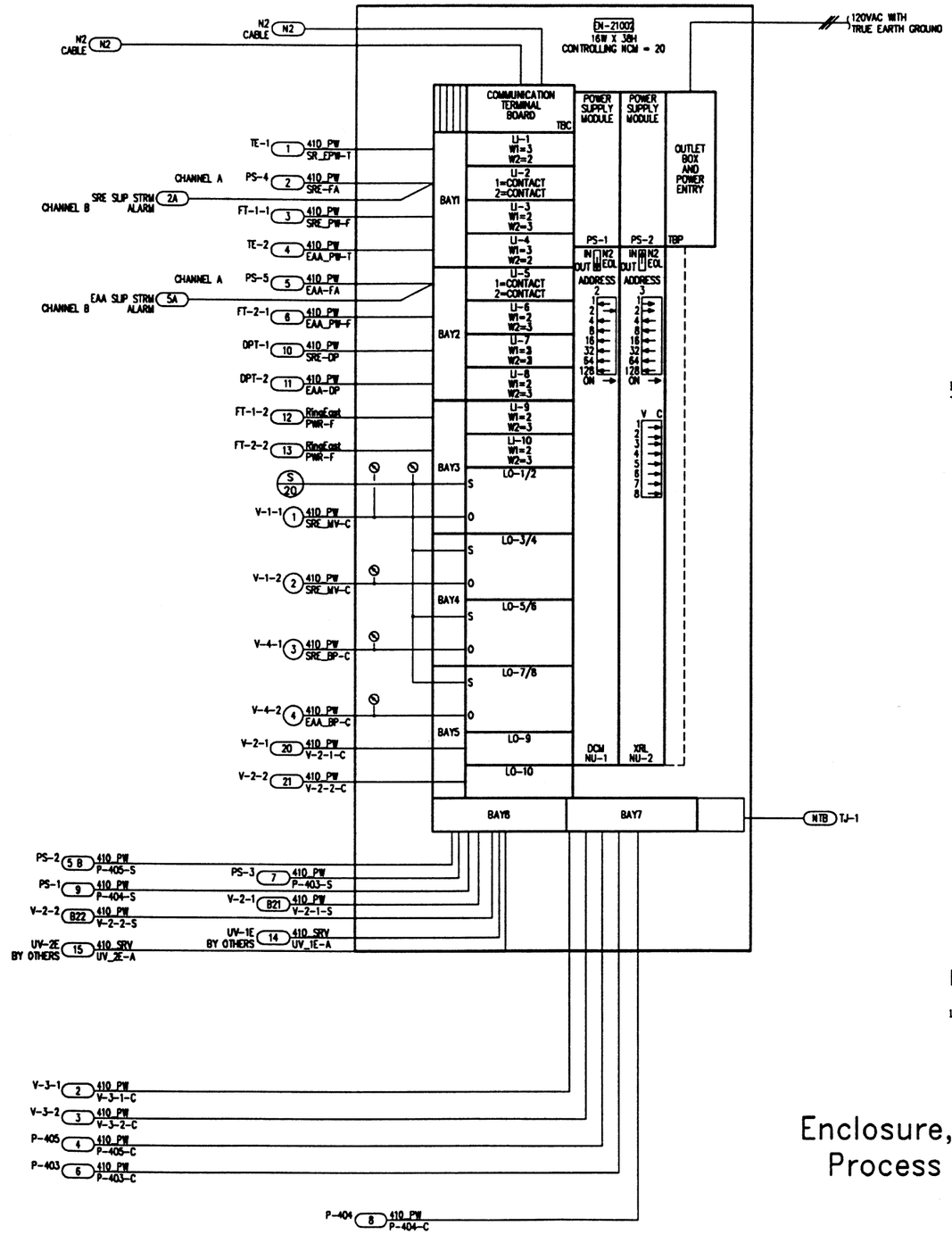

PANEL MATERIAL

	DEVICE TAG	QTY	CODE NUMBER	DESCRIPTION
(P)	EN-21002	1	EN-BSF201-0	2 SLOT BASE FRAME
		1	EN-EVC200-0	NCU/NEU 16X38 ENCLOSURE
		1	ID-NTU102-0	NETWORK TERMINAL W/LIGHT
		1	ID-NTU114-0	REMOTE LINE DRIVER
	LI-1, LI-3-LI-4, LI-6-LI-10	9	FM-IUN101-0	UNIVERSAL INPUT FM
	LI-2,LI-5	2	FM-IBN101-0	2 BINARY INPUT FM
	LO-1/2, LO-3/4, LO-5/6, LO-7/8	4	FM-DAP101-0	E/P OUT FM FOR DCM
		4	FM-DAP102-0	DAP MANUAL MODULE
	LO-9-LO-10	2	FM-DRL101-0	LATCH RELAY OUTPUT FM
	NU-1	1	NU-DCN101-0	DIGITAL CONTROL MODULE
	NU-2	1	NU-XRL101-0	XM-8/OUT LATCH 8/INP
	PS-1-PS-2	2	NU-PWR101-0	POWER SUPPLY
	ACC	5	G-2010-5	GAUGE

NOTES:

1. ALL MATERIAL WITH (P) PRECEEDING THE DEVICE TAG IN THE BILL OF MATERIAL IS PROPRIETARY AND IS BEING SUPPLIED BY JOHNSON CONTROLS, INC. ALL OTHER MATERIAL IS NON-PROPRIETARY.

POINT OBJECT DEFINITION

Hardware Dev	Sys\Obj Name	Dmld Type	Actl Type	Slot Type	Slot Nmbr	Sub Slt	Software Sys\Obj Name	S/W Type	Point Type
1	NC21_HW\DCM1	DCM	101						
				Input	1		RINGWEST\PVS-T	AI	
				Input	2		NC21_SV\UV_1V-A	DI	BI
				Input	3		RINGWEST\PVS-F	AI	
				Input	4		RINGWEST\PV-DP	AI	
				Input	5	1	RINGWEST\FILTER	DI	MBI
				Input	6		RINGWEST\PWR-F	AI	
				Input	7		RINGWEST\P-402-S	DI	BI
				Input	8		RINGWEST\P-401-S	DI	BI
				Input	9		RINGWEST\ISOL-S	DI	BI
				Input	5	2	RINGWEST\SLIPSTRM	DI	MBI
				Output	1		RINGWEST\MIX-VLV	AOD	PROP
				Output	3		RINGWEST\BYP-VLV	AOD	PROP
				Output	5		RINGWEST\ISOL-VLV	DO	MAINT
				Output	6		RINGWEST\P-401-C	DO	MAINT
				Output	7		RINGWEST\P-402-C	DO	MAINT
2	NC21_HW\DCM2	DCM	101						
				Input	1		RINGEAST\PVS-T	AI	
				Input	2	1	RINGEAST\FILTER	DI	MBI
				Input	3		RINGEAST\PVS-F	AI	
				Input	4		RING-EAA\PVS-T	AI	
				Input	5	1	RING-EAA\FILTER	DI	MBI
				Input	6		RING-EAA\PVS-F	AI	
				Input	7		RINGEAST\PV-DP	AI	
				Input	8		RING-EAA\PV-DP	AI	
				Input	9		RINGEAST\PWR-F	AI	
				Input	10		RING-EAA\PWR-F	AI	
				Input	2	2	RINGEAST\SLIPSTRM	DI	MBI
				Input	5	2	RING-EAA\SLIPSTRM	DI	MBI
				Output	1		RINGEAST\MIX-VLV	AOD	PROP
				Output	3		RINGEAST\BYP-VLV	AOD	PROP
				Output	5		RING-EAA\MIX-VLV	AOD	PROP
				Output	7		RING-EAA\BYP-VLV	AOD	PROP
				Output	9		RINGEAST\ISOL-VLV	DO	MAINT
				Output	10		RING-EAA\ISOL-VLV	DO	MAINT
3	NC21_HW\XRL1	XRL	XRL						
				Input	1		RINGEAST\P-405-S	DI	SINGLE
				Input	2		RING-EAA\P-403-S	DI	SINGLE
				Input	3		STBY_410\P-404-S	DI	SINGLE
				Input	4		RINGEAST\ISOL-S	DI	SINGLE
				Input	5		RING-EAA\ISOL-S	DI	SINGLE
				Input	6		NC21_SV\UV_1E-A	DI	SINGLE
				Input	7		NC21_SV\UV_2E-A	DI	SINGLE
				Output	1		RINGEAST\STBY-VLV	DO	
				Output	2		RING-EAA\STBY-VLV	DO	
				Output	3		RINGEAST\P-405-C	DO	
				Output	4		RING-EAA\P-403-C	DO	
				Output	5		STBY_410\P-404-C	DO	

POINT OBJECT DEFINITION FOR EN-21100

100	NC21_HW\UNT100	UNT	UNT			
				2	RINGEAST\SSTBY-S	DI
				1	RINGEAST\RSTBY-S	DI
				4	RING-EAA\SSTBY-S	DI
				3	RING-EAA\RSTBY-S	DI

Enclosure, EN-21002, NEU Serving Building 410
Process Water(E.A.A. and Storage Ring East)

COPYRIGHT JOHNSON CONTROLS, INC.1993

FILE: EN-21002

DRAWING TITLE
Enclosure, EN-21002
NEU Serving Building 410
Process Water, E.A.A. West
Storage Ring

REFERENCE DRAWING	NO.	REVISION-LOCATION	ECN	DATE	BY
		RECORD		06/08/94	SF

SALES ENGR	PROJECT MGR	APPL. ENGR	DRAWN	APPROVED
JP	SF	DCS	BY SF DATE 12/30/91	BY DATE

PROJECT
The Argonne National Labs
Advanced Photon Source Campus
9700 Cass Avenue South
Argonne, IL 60439

JOHNSON CONTROLS
Systems & Services Division
3007 MALMO ROAD
ARLINGTON HEIGHTS
ILLINOIS 60005
708/364-1500 Main
708/808-4436 Eng

CONTRACT NUMBER 91390-0009

DRAWING NUMBER 91-9-C-02C