Digital ASCs Serving Series Fan VAV Terminal Units With Reheat–AHU–3 (TYPICAL)

FIELD MATERIAL

DEVICE TAG	QTY	CODE NUMBER	DESCRIPTION
TE-1	xxx	TE-6411W-1010	TEMP SENSOR; 1000 OHM, NI

PANEL MATERIAL

DEVICE TAG	QTY	CODE NUMBER	DESCRIPTION
AT-1	xxx	ATP-2040-612	ACT/TRANS 6 MIN 1.5",1/2"
DC-1	xxx	AS-VAV101-0	VAV CNTR W/O ENC 68062AQ

RECEIVED
OCT 07 1994
PERINI BLDG. CO., INC.
JOB #228-ARGONNE NATL LAB

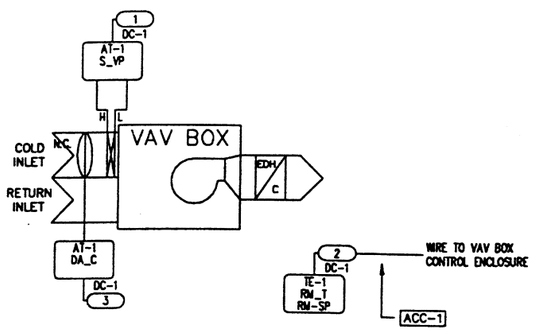

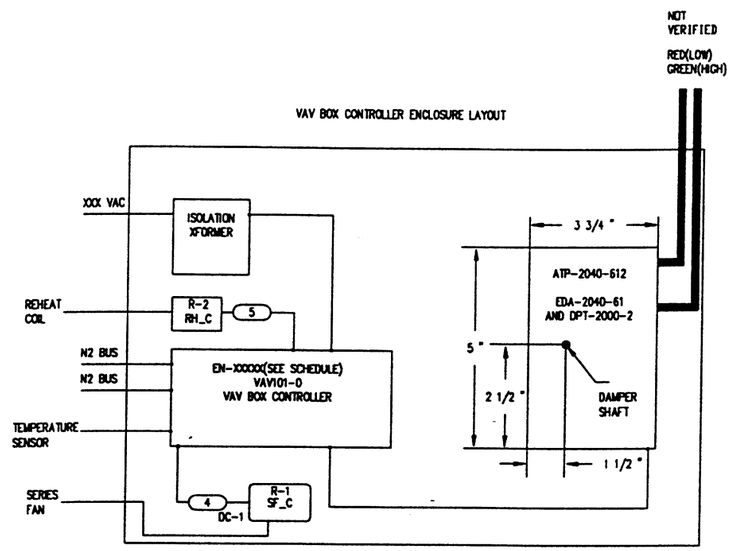

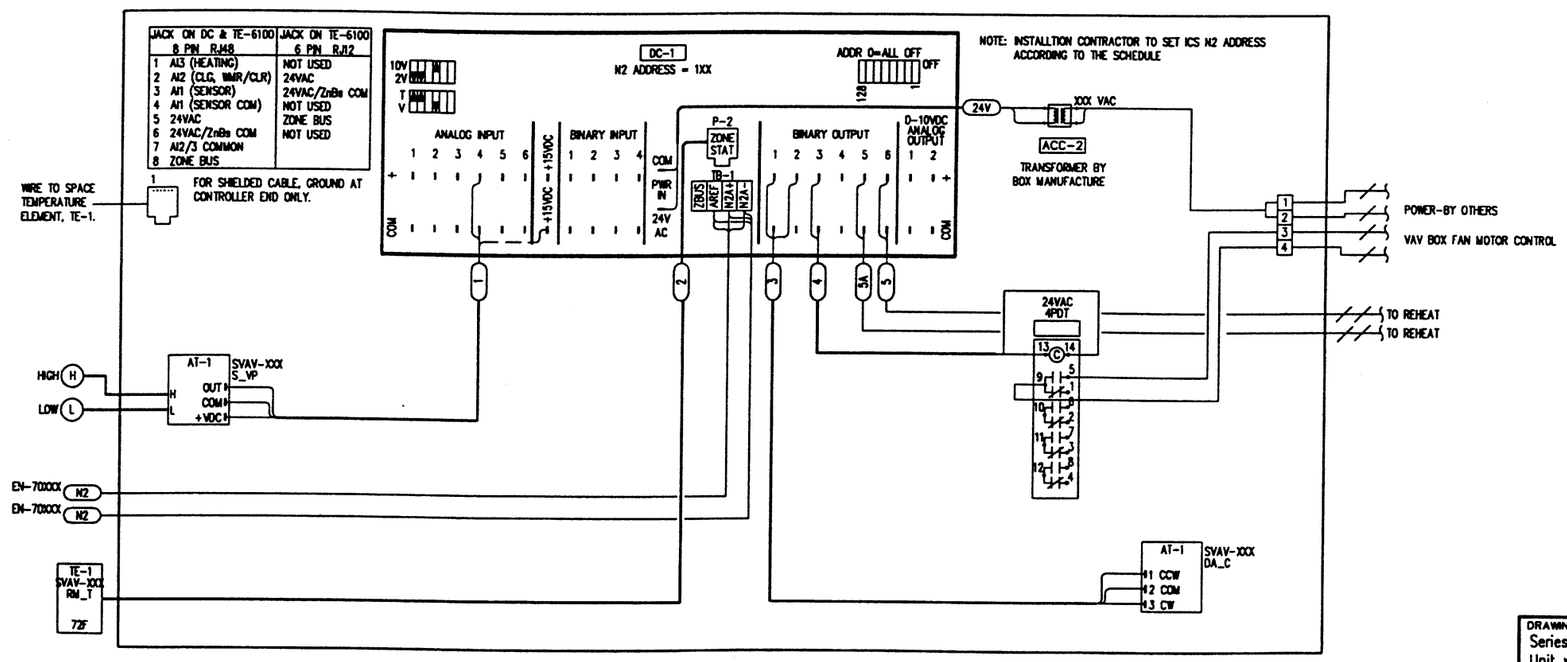

Sequence of Operations

OCCUPIED MODE:

THE DIGITAL CONTROLLER WILL MODULATE VAV TERMINAL UNIT DAMPER, DA-1 TO MAINTAIN A FLOW SETPOINT ACCORDING TO THE ASC CONFIGURATION FILE INDICATED ON THE ENCLOSURE/ROOM SCHEDULE. THE FLOW SETPOINT WILL BE CALCULATED TO MAINTAIN OCCUPIED HEATING/COOLING MINIMUM AND MAXIMUM FLOW RATES AS THE SPACE TEMPERATURE TRAVELS THROUGH THE HEATING AND COOLING PROPORTIONAL BANDS. CONTROLLED DEVICE, DA-1, VAV DAMPER WILL BE MODULATED TO MAINTAIN AN ACTUAL HEATING/COOLING SETPOINT. THE ACTUAL TEMPERATURE SETPOINT CAN BE ADJUSTED PLUS OR MINUS 5 F. FROM THE BASE SETPOINT, 76 F. AT TEMPERATURE ELEMENT, TE-1. THE BASE SETPOINT CAN BE ADJUSTED FROM ANY ICS OPERATOR WORKSTATION. THE SERIES BOX FAN WILL RUN CONSTANTLY IN THIS MODE.

UNOCCUPIED MODE:

THE ZONE MAY BE PLACED IN A TEMPORARY OCCUPANCY MODE BY DEPRESSING THE SWITCH LOCATED ON THE SPACE TEMPERTURE ELEMENT, TE-1. THE DIGITAL CONTROLLER WILL MODULATE VAV TERMINAL UNIT DAMPER, DA-1 TO MAINTAIN A FLOW SETPOINT ACCORDING TO THE CONFIGURATION FILE. THE FLOW SETPOINT WILL BE CALCULATED TO MAINTAIN UNOCCUPIED HEATING/COOLING MINIMUM AND MAXIMUM FLOW RATES AS THE SPACE TEMPERATURE TRAVELS THROUGH THE HEATING AND COOLING PROPORTIONAL BANDS. BOTH CONTROLLED DEVICE, DA-1, VAV DAMPER WILL BE MODULATED TO MAINTAIN AN UNOCCUPIED SPACE TEMPERATURE SETPOINT AS DEFINED IN THE ASC CONFIGURATION FILE. THE UNOCCUPIED TEMPERATURE SETPOINT IS ADJUSTABLE FROM ANY ICS OPERATOR WORKSTATION. THE SERIES BOX FAN WILL BE CYCLED PER THE BOX UNOCCUPIED HEATING TEMPERATURE SETPOINT.

Motor Control

FAN CONTROL

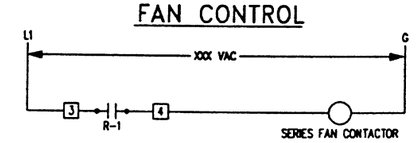

ELECTRIC REHEAT COIL

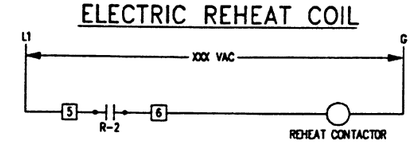

FILE: CLO_RHFP
DCODE: 19940119.2035

DRAWING TITLE
Series Fan, VAV Terminal Unit w/electric reheat

REFERENCE DRAWING	NO.	REVISION-LOCATION	ECN	DATE	BY

SALES ENGR	PROJECT MGR	APPL. ENGR	DRAWN	APPROVED
JP	SF	DCS	BY SF DATE 10/06/94	BY DATE

PROJECT
The Argonne National Labs
Advanced Photon Source Campus
9700 Cass Avenue South
Argonne, IL 60439

JOHNSON CONTROLS
Systems & Services Division
3007 MALMO ROAD
ARLINGTON HEIGHTS
ILLINOIS 60005
708/364-1500 Main
708/806-4438 Eng

CONTRACT NUMBER 91390-0009
DRAWING NUMBER 91-9-G-5D

COPYRIGHT JOHNSON CONTROLS, INC.1993