Digital ASCs Serving Series Fan VAV Terminal Units With Reheat For Air Handling Unit AHU-3 (TYPICAL)

FIELD MATERIAL

DEVICE TAG	QTY	CODE NUMBER	DESCRIPTION
TE-1	36	TE-6411V-1010	TEMP SENSOR; 1000 OHM, NI
V-1	36	----	SEE VALVE SCHEDULE

PANEL MATERIAL

DEVICE TAG	QTY	CODE NUMBER	DESCRIPTION
AT-1	36	ATP-2040-612	ACT/TRANS 6 MIN 1.5",1/2"
DC-1	36	AS-VAV111-0	

RECEIVED
OCT 07 1994
PERINI BLDG. CO., INC.

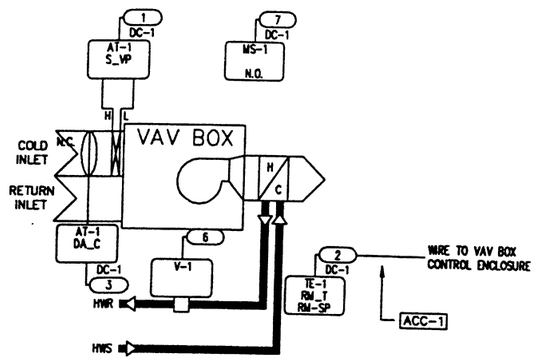

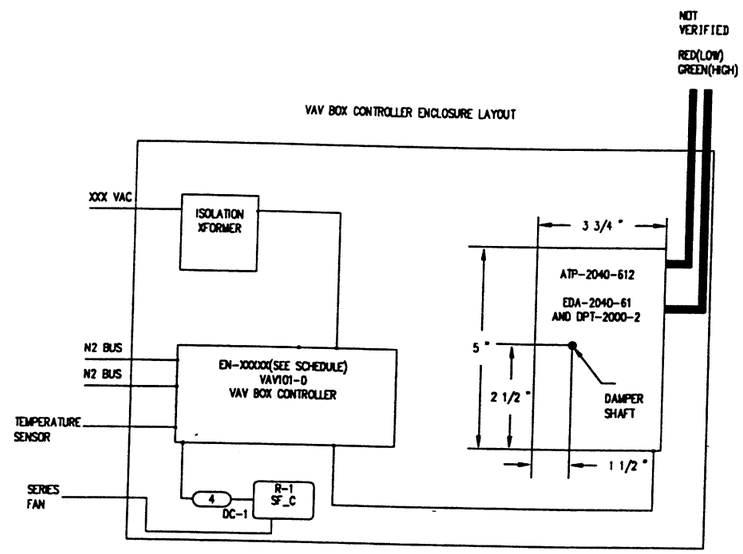

JACK ON DC & TE-6100 8 PIN RJ48	JACK ON TE-6100 6 PIN RJ12
1 AI3 (HEATING)	NOT USED
2 AI2 (CLG, WMR/CLR)	24VAC
3 AI1 (SENSOR)	24VAC/ZnBs COM
4 AI1 (SENSOR COM)	NOT USED
5 24VAC	ZONE BUS
6 24VAC/ZnBs COM	NOT USED
7 AI2/3 COMMON	
8 ZONE BUS	

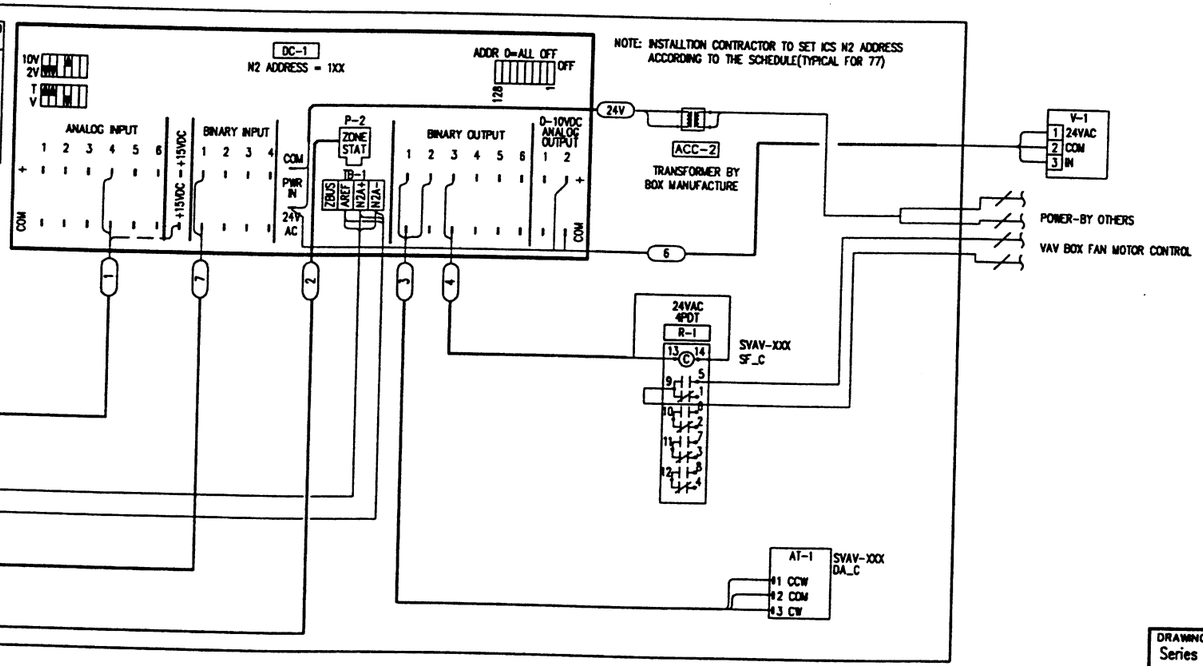

Sequence of Operations

OCCUPIED MODE:

THE DIGITAL CONTROLLER WILL MODULATE VAV TERMINAL UNIT DAMPER, DA-1 TO MAINTAIN A FLOW SETPOINT ACCORDING TO THE ASC CONFIGURATION FILE INDICATED ON THE ENCLOSURE/ROOM SCHEDULE. THE FLOW SETPOINT WILL BE CALCULATED TO MAINTAIN OCCUPIED HEATING/COOLING MINIMUM AND MAXIMUM FLOW RATES AS THE SPACE TEMPERATURE TRAVELS THROUGH THE HEATING AND COOLING PROPORTIONAL BANDS. CONTROLLED DEVICE, DA-1, AND V-1 WILL BE MODULATED TO MAINTAIN AN ACTUAL HEATING/COOLING SETPOINT. THE ACTUAL TEMPERATURE SETPOINT CAN BE ADJUSTED PLUS OR MINUS 5 F. FROM THE BASE SETPOINT, 76 F. AT TEMPERATURE ELEMENT, TE-1. THE BASE SETPOINT CAN BE ADJUSTED FROM ANY ICS OPERATOR WORKSTATION. THE SERIES BOX FAN WILL RUN CONSTANTLY IN THIS MODE.

UNOCCUPIED MODE:

THE ZONE MAY BE PLACED IN A TEMPORARY OCCUPANCY MODE BY DEPRESSING THE SWITCH LOCATED ON THE SPACE TEMPERTURE ELEMENT, TE-1. THE DIGITAL CONTROLLER WILL MODULATE VAV TERMINAL UNIT DAMPER, DA-1 TO MAINTAIN A FLOW SETPOINT ACCORDING TO THE CONFIGURATION FILE. THE FLOW SETPOINT WILL BE CALCULATED TO MAINTAIN UNOCCUPIED HEATING/COOLING MINIMUM AND MAXIMUM FLOW RATES AS THE SPACE TEMPERATURE TRAVELS THROUGH THE HEATING AND COOLING PROPORTIONAL BANDS. BOTH CONTROLLED DEVICE, DA-1, VAV DAMPER WILL BE MODULATED TO MAINTAIN AN UNOCCUPIED SPACE TEMPERATURE SETPOINT AS DEFINED IN THE ASC CONFIGURATION FILE. THE UNOCCUPIED TEMPERATURE SETPOINT IS ADJUSTABLE FROM ANY ICS OPERATOR WORKSTATION. THE SERIES BOX FAN WILL BE CYCLED PER THE BOX UNOCCUPIED HEATING TEMPERATURE SETPOINT.

Motor Control

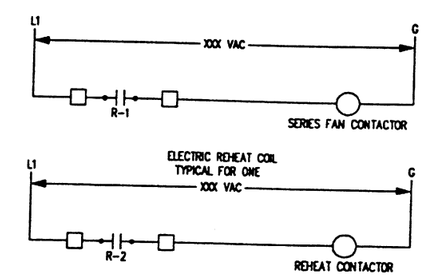

COPYRIGHT JOHNSON CONTROLS, INC.1993

DRAWING TITLE: Series Fan, VAV Terminal Unit With Electric Reheat

REFERENCE DRAWING	NO.	REVISION-LOCATION	ECN	DATE	BY
	2	GENERAL		10/06/94	SF
	1	GENERAL		08/27/94	SF

SALES ENGR: JP | PROJECT MGR: SF | APPL. ENGR: DCS | DRAWN BY DCS DATE 12/17/92 | APPROVED BY DATE

FILE: G-5D-A
DCODE: 19940120.0927

PROJECT: The Argonne National Labs, Advanced Photon Source Campus, 9700 Cass Avenue South, Argonne, IL 60439

JOHNSON CONTROLS, Systems & Services Division, 3007 MALMO ROAD, ARLINGTON HEIGHTS, ILLINOIS 60005, 708/364-1500 Main, 708/806-4438 Eng

CONTRACT NUMBER: 91390-0009

DRAWING NUMBER: 91-9-G-05C