FLOW DIAGRAM AND EQUIPMENT LOCATIONS FOR AIR HANDLING UNIT, AHU-4002

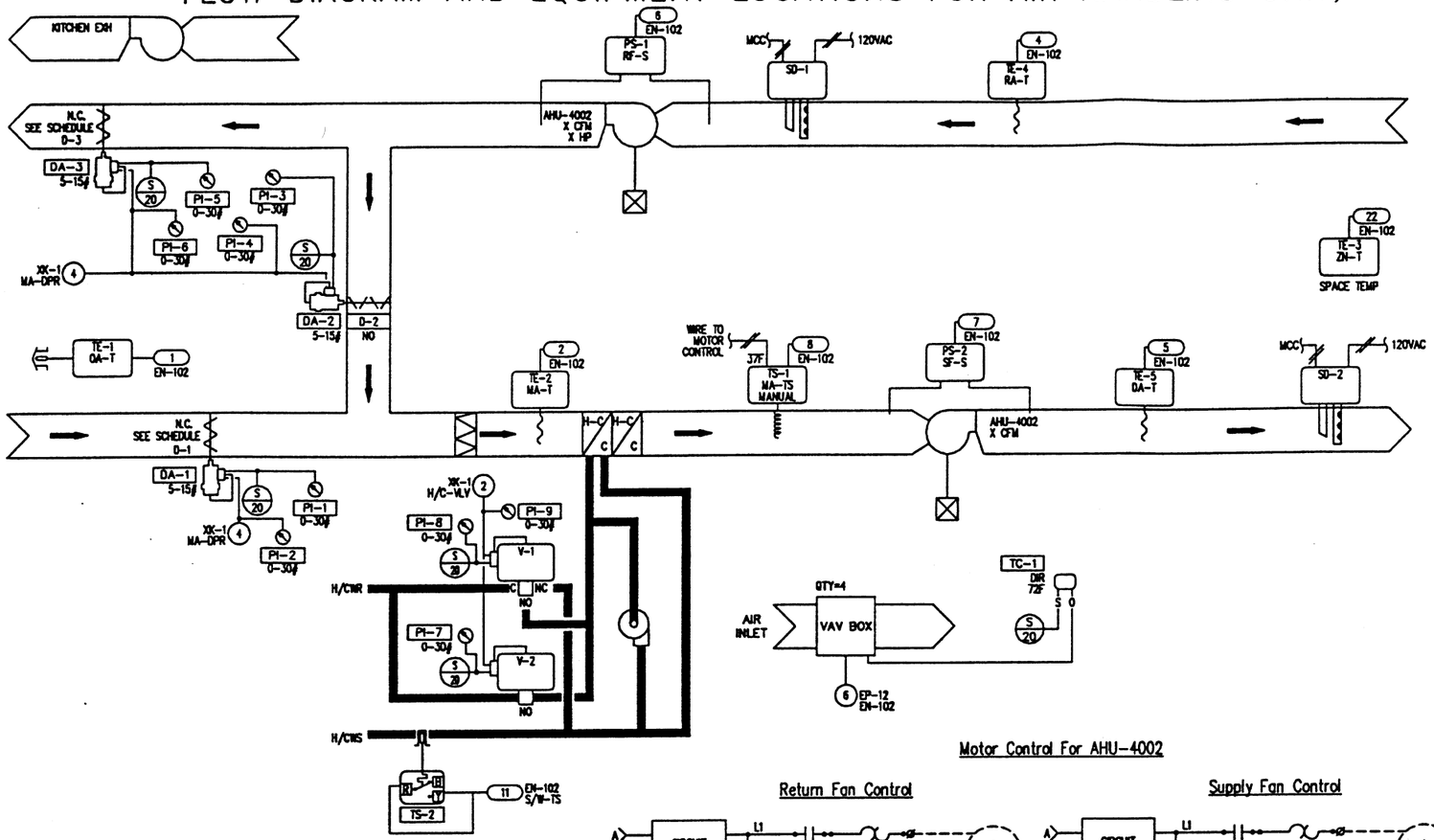

Motor Control For AHU-4002

Return Fan Control

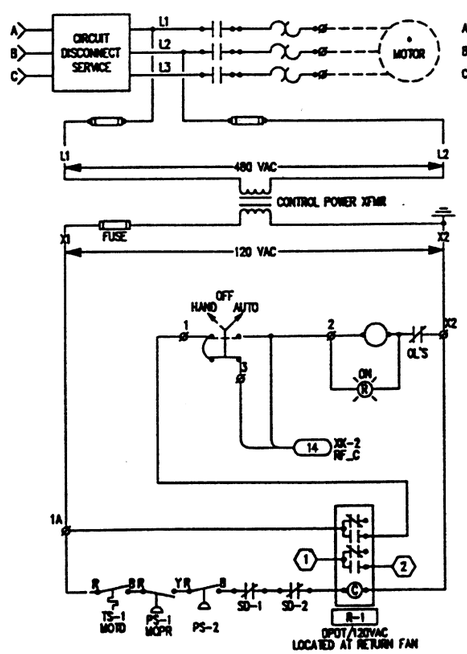

Supply Fan Control

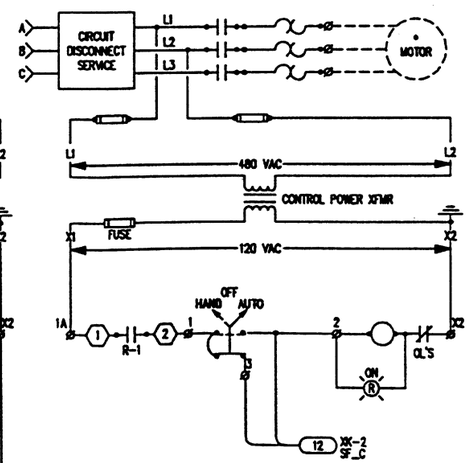

Line Voltage Control For Pump P-4002

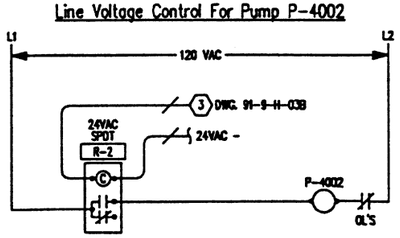

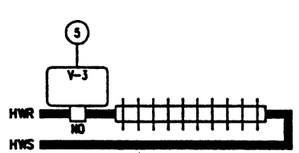

FIELD MATERIAL

DEVICE TAG	QTY	CODE NUMBER	DESCRIPTION
D-2	1	——	SEE DAMPER SCHEDULE
DA-1-DA-3	3	D-3153-1	DPR ACT 8-13# W/POS
PI-1-PI-9	9	G-2010-5	AIR GAGE 1-1/2"
PS-1-PS-2	2	P32AF-2C	SENSITIVE DIFF PRES CTL
R-1	2	RH2B-AC120L	120VAC DPDT RELAY W/IND LITE-IDEC
	2	SH2B-05	DPDT RELAY BASE-IDEC
R-2	2	RIM115	SPDT RELAY IN A BOX W/HOA-FUNCT DEV
SD-1-SD-2	2	TC807A	DUCT SMOKE DET-HONEYWELL
	2	145067873	DUCT SMK DETECTOR HOUSING-HONEYWELL
	2	ST-10	SAMPLING TUBE FOR
TC-1	1	T-4002-201	THERMOSTAT; DIR HORIZ F
	1	T-4000-3139	COVER; WHITE PLASTIC. HRZ
	1	T-4002-124	MTG. BRACKET, THERM.
TE-1	1	TE-6313P-1	TEMP SENSOR; 1000 OHM, NI
TE-2,TE-5	2	TE-6316P-1	TEMP SENSOR; NI, 17' AVE.
TE-3	1	TE-6411V-2110	TEMP SENSOR; 1000 OHM, NI
TE-4	1	TE-6311P-1	TEMP SENSOR; 1000 OHM, NI
TS-1	1	A70HA-1C	TEMP CONTROL 4 WIRE, 2-C
TS-3	1	A19ABC-11C	GENL PURPOSE TEMP CONTROL
V-1-V-2	2	——	SEE VALVE SCHEDULE

Sequence of Operations

THE DIGITAL CONTROLLER WILL START THE SUPPLY FAN BASED ON THE ZONE TERMINAL SCHEDULE.

COOLING MODE-DETERMINED BY TEMPERATURE SWITCH, TS-3

THE DIGITAL CONTROLLER, EN-80104 WILL MODULATE THE MIXED AIR DAMPERS AND THE HTG/CLG CONTROL VALVES, V-1,2 IN A REVERSE ACTING MODE TO MAINTAN A ZONE TEMPEATURE OF 72 F.

HEATING MODE-DETERMINED BY TEMPERATURE SWITCH, TS-3

THE DIGITAL CONTROLLER, EN-80104 WILL MODULATE THE MIXED AIR DAMPERS AND THE HTG/CLG CONTROL VALVES, V-1,2 IN A DIRECT ACTING MODE TO MAINTAIN ZONE TEMPEATURE OF 72 F.

THE DIGITAL CONTROLLER WILL LIMIT THE MIXED AIR DAMPER POSITION TO A MINIMUM VALUE OF 20 % IN THE ECONOMIZER OFF MODE.

PUMP STATUS WILL BE MONITORED BY CURRENT SWITHCES, CS-1.

FAN STATUS WILL BE MONITORED BY DIFFERENTIAL PRESSURE SWITCHES, PS-1,2.

THE PUMP WILL START THROUGH CONTROL RELAY, R-1 2 AT OUTDOOR AIR TEMPERATURES BELOW 45 F.

LOW LIMIT TEMPERATURE SWITCH WILL STOP THE SUPPLY FAN, CLOSE THE OUTDOOR AIR DAMPER AND OPEN THE H/C VALVE IN THE EVENT THAT THE H/C COIL DISCHARGE AIR TEMPERATURE DROPS BELOW 35 F.

SMOKE DETECTORS WILL STOP THE FAN SYSTEM IN THE EVENT THAT SMOKE IS DETECTED.

THE ICS SCHEDULE AND THE STATUS OF THE KITCHEN EXHAUST FAN WILL ENABLE AHU-2 TO RUN.

THE ECONIMIZER WILL ALLOW THE USE OF OUTDOOR AIR FOR COOLING IF THE OUTDOOR AIR TEMPERATURE IS LESS THAN 68 F. AND HEATING WATER IS PRESENT.

THE DIGITAL CONTROLLER WILL SEQUENCE THE BASEBOARD RADIATION VALVES WITH THE AIR HANDLING UNIT HEATING VALVES TO MAINTAIN A SPACE TEMPERATURE SETPOINT. THE BASEBOARD VALVE WILL OPEN BEFORE THE HEATING COIL VALVE.

IF TS-1 TRIPS, RELAY XX-2/D OPENS & FAILS VALVES TO NORMAL POSITION.

NOTES:

HARDWIRE INTERLOCK AN AUX CONTACT OR RELAY CONTACT FROM THE KITCHEN EXHAUST FAN STARTER TO THE CONTROL CIRCUIT FOR AHU-4002.

LEADER LINE INDICATES POSSIBLE FUTURE CONECTION FOR SAFETY CONTACTS.

FILE: URF_AHU2

DRAWING TITLE
Air Handling Unit, AHU-4002
Constant Volume Unit

NO.	REVISION-LOCATION	ECN	DATE	BY
2	AS BUILT		07/08/96	SAC
1	GENERAL		08/11/95	SF

REFERENCE DRAWING			DRAWN	APPROVED
SALES ENGR	PROJECT MGR	APPL. ENGR	BY SF DATE 04/28/95	BY DATE
JS	SF	DCS		

PROJECT
The Argonne National Labs
APS Users Residence Facility
9700 Cass Avenue South
Argonne, IL 60439

JOHNSON CONTROLS
Systems & Services Division
3007 Malmo Drive
Arlington Hts., IL
60005
847-364-1500

CONTRACT NUMBER 95010-1013

DRAWING NUMBER 91-9-H-03A

COPYRIGHT JOHNSON CONTROLS, INC.1995