FLOW DIAGRAM AND EQUIPMENT LOCATIONS FOR AIR HANDLING UNIT, AHU-4001

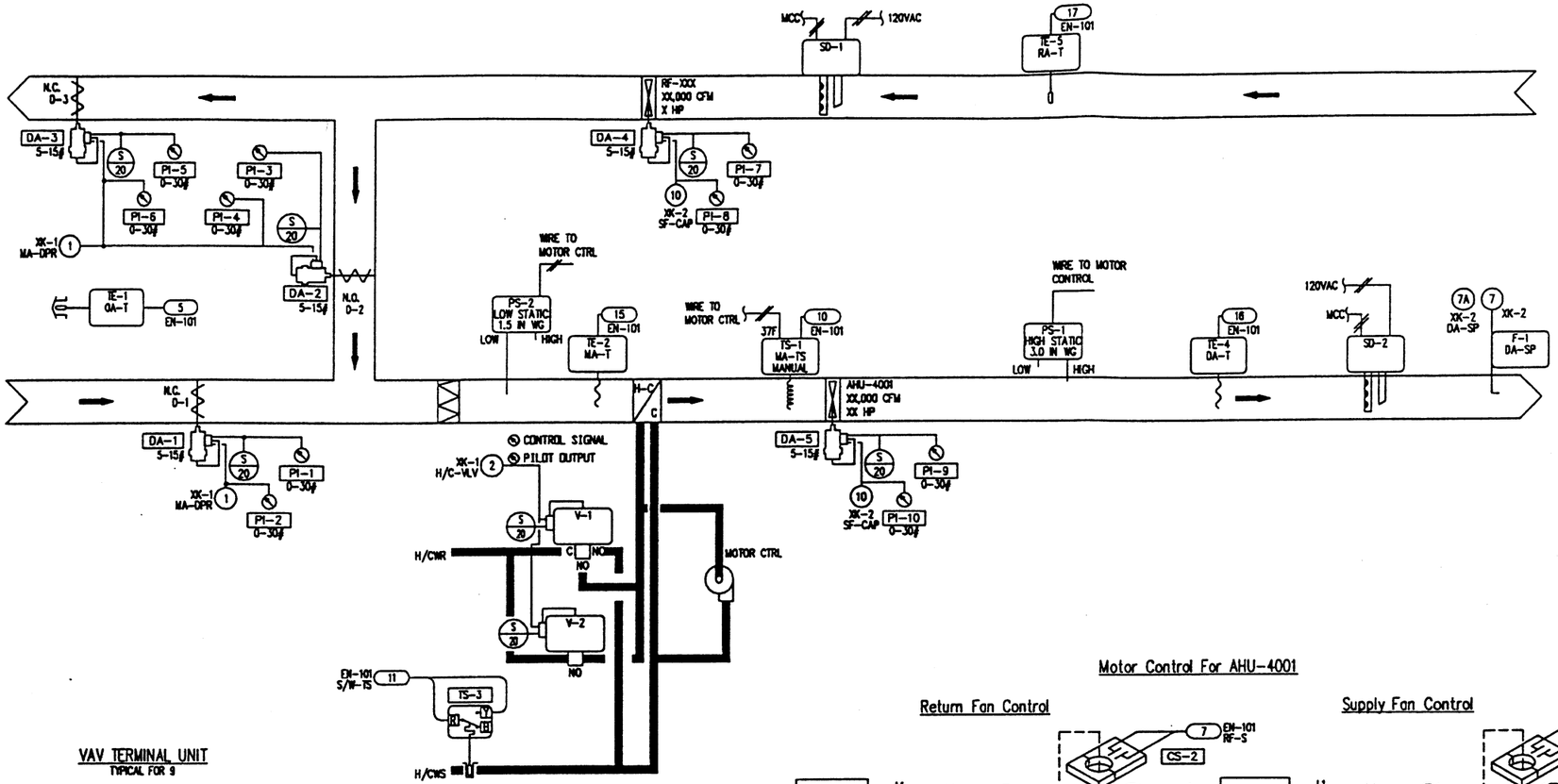

VAV TERMINAL UNIT

TYPICAL FOR 9

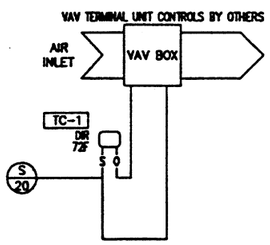

VAV TERMINAL UNIT

TYPICAL FOR 9

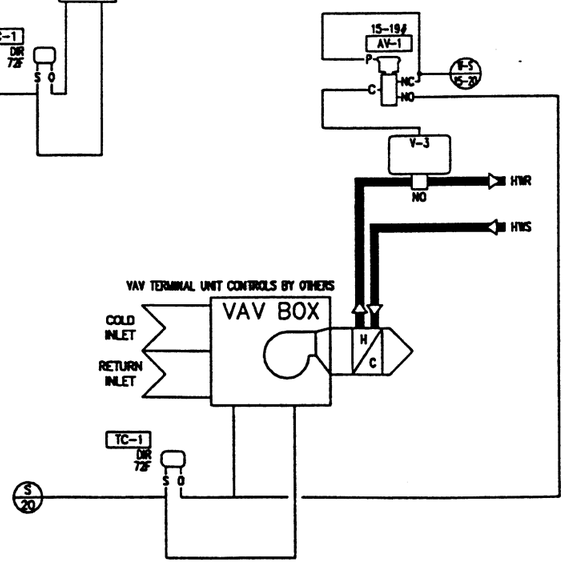

Motor Control For AHU-4001

Return Fan Control

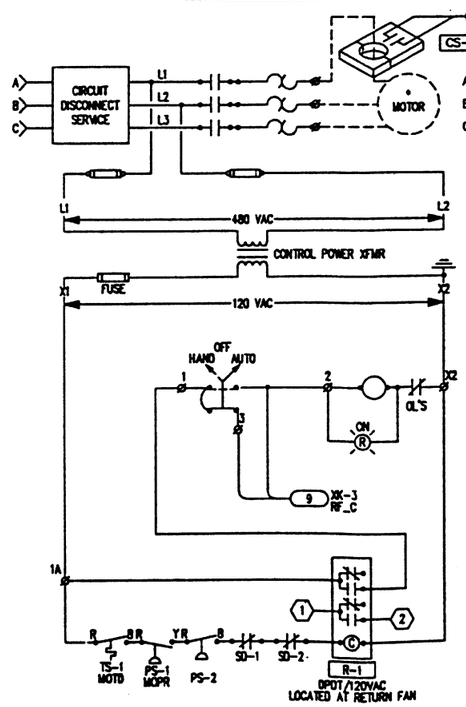

Supply Fan Control

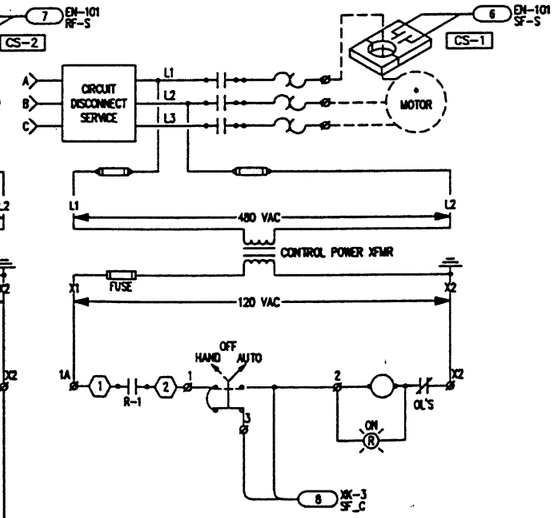

COPYRIGHT JOHNSON CONTROLS, INC.1995

FIELD MATERIAL

DEVICE TAG	QTY	CODE NUMBER	DESCRIPTION
CS-1-CS-2	2	H908	HAWKEYE CURRENT SENSOR-VERIS IND
DA-1-DA-3	3	D-3153-1	DPR ACT 8-13# W/POS
DA-4-DA-5	2	D-3244-1	DPR ACT 8-13# W/POS FLOOR
F-1	1	FTG18A-600R	REMOTE MTD PROBE
PI-1-PI-10	10	G-2010-5	AIR GAGE 1-1/2"
PS-1-PS-2	2	1900-5-MR	DUCT PRESS MONITOR-DWYER
R-1	2	RH2B-AC120L	120VAC DPDT RELAY W/IND LITE-IDEC
	2	SH2B-05	DPDT RELAY BASE-IDEC
R-2	2	RIBU1S	SPDT RELAY IN A BOX W/HOA-FUNCT DEV
SD-1-SD-2	2	TC807A	SMOKE DETECTOR-HONEYWELL
	2	145067873-001	DUCT SMK DETECTOR HOUSING-HONEYWELL
	2	ST-10	SAMPLING TUBE FOR-HONEYWELL
TC-1	18	T-4002-201	THERMOSTAT; DIR HORIZ F
	18	T-4000-3139	COVER; WHITE PLASTIC, HRZ
	18	T-4002-122	2-PIPE MTG STR FITTINGS
	18	T-4002-124	MTG. BRACKET, THERM.
TE-1	1	TE-6313P-1	TEMP SENSOR; 1000 OHM, NI
TE-2,TE-4	2	TE-6316P-1	TEMP SENSOR; NI, 17' AVE.
TE-5	1	TE-6311P-1	TEMP SENSOR; 1000 OHM, NI
TS-1	1	A70HA-1C	TEMP CONTROL 4 WIRE, 2-C
TS-3	1	A19ABC-1C	GENL PURPOSE TEMP CONTROL
	1	WEL16A-601R	BULB WELL ASSY
V-1-V-3	12	——	SEE VALVE SCHEDULE

PANEL MATERIAL

DEVICE TAG	QTY	CODE NUMBER	DESCRIPTION
AV-1	9	V-6135-3	AIR VALVE, 3-WAY

Line Voltage Control For Pump P-4001

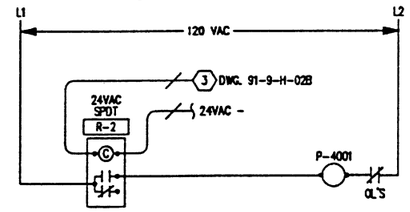

SEQUENCE OF OPERATIONS

THE DIGITAL CONTROLLER WILL START THE SUPPLY FAN BASED ON THE ZONE TERMINAL SCHEDULE.

COOLING MODE-DETERMINED BY TEMPERATURE SWITCH, TS-3

THE DIGITAL CONTROLLER, EN-80101 WILL MODULATE THE MIXED AIR DAMPERS AND THE HTG/CLG CONTROL VALVES, V-1,2 IN A REVERSE ACTING MODE TO MAINTAN A DISCHARGE AIR TEMPERATURE OF 55 F.

HEATING MODE-DETERMINED BY TEMPERATURE SWITCH, TS-3

THE DIGITAL CONTROLLER, EN-80101 WILL MODULATE THE MIXED AIR DAMPERS AND THE HTG/CLG CONTROL VALVES, V-1,2 IN A DIRECT ACTING MODE TO MAINTAIN A DISCHARGE AIR TEMPERATURE OF 55 F.

THE DIGITAL CONTROLLER WILL LIMIT THE MIXED AIR DAMPER POSITION TO A MINIMUM VALUE OF 20 % IN THE ECONOMIZER OFF MODE. ECONO SP=68 F.

THE DIGITAL CONTROLLER WILL MODULATE THE SUPPLY AND RETURN FANS IN UNISON TO MAINTAIN A DISCHARGE AIR STATIC PRESSURE SETPOINT OF 1.50 IN WG.

FAN STATUS WILL BE MONITORED BY CURRENT SWITHCES, CS-1-2.

THE PUMP WILL START THROUGH CONTROL RELAY, R-2 AT OUTDOOR AIR TEMPERATURES BELOW 45 F.

LOW LIMIT TEMPERATURE SWITCH WILL STOP THE SUPPLY FAN AND CLOSE THE OUTDOOR AIR DAMPER IN THE EVENT THAT THE H/C COIL DISCHARGE AIR TEMPERATURE DROPS BELOW 35 F.

HIGH AND LOW STATIC PRESSURE SWITCHES, PS-1,2 WILL LOCKOUT THE FAN SYSTEM IN THE EVENT THAT STATIC PRESSURE SETPOINT LEVELS ARE REACHED.

PNEUMATIC ROOM CONTROLLER, TC-1 WILL CONTROL VAV TERMINAL UNITS TO MAINTAIN A ZONE TEMPERATURE SETPOINT OF 72 F.

H/C VALVE WILL OPEN IF LOW LIMIT TEMPERATURE SWITCH, TS-1 IS IN AN ALARM CONDITION.
THE H/C WATER TEMPERATURE AND THE OUTDOOR AIR TEMPERATURE WILL 'AND' THEIR CONDITION AND SET THE STATUS OF THE ECONOMIZER MODE. THE ECONIMIZER WILL BE ALLOW THE USE OF OA FOR COOLING IF THE OUTDOOR AIR TEMPERATURE IS LESS THAN 68 F. AND HEATING WATER IS PRESENT.

IF TS-1 TRIPS, RELAY XX-3/D OPENS & FAILS VALVES TO NORMAL POSITION.

FILE: URF_AHU1

DRAWING TITLE
Air Handling Unit, AHU-4001
Variable Air Volume

REFERENCE DRAWING	NO.	REVISION-LOCATION	ECN	DATE	BY
	2	AS BUILT		07/08/96	SAC
	1	GENERAL		08/11/95	SF

SALES ENGR	PROJECT MGR	APPL. ENGR	DRAWN		APPROVED	
JS	SF	DCS	BY SF	DATE 04/28/95	BY	DATE

PROJECT
The Argonne National Labs
APS Users Residance Facility
9700 Cass Avenue South
Argonne, IL 60439

JOHNSON CONTROLS
Systems & Services Division
3007 Malmo Drive
Arlington Hts., IL
60005
847-364-1500

CONTRACT NUMBER
95010-1013

DRAWING NUMBER
91-9-H-02A