WARNING: DRAWING MAY BE REDUCED

UTILITY BLDG. 2A
FRAMING
ELEVATIONS
DPK

450 S601
4SUT3A
12/06/90 14:57:14

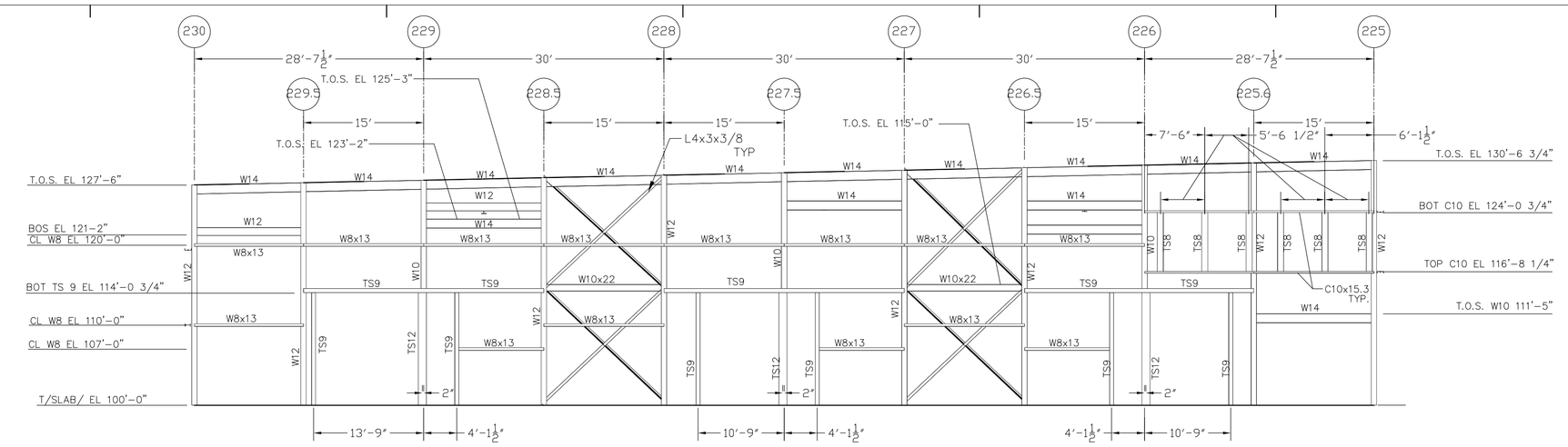

1 NORTHEAST ELEVATION
SCALE: 1/8" = 1'-0"

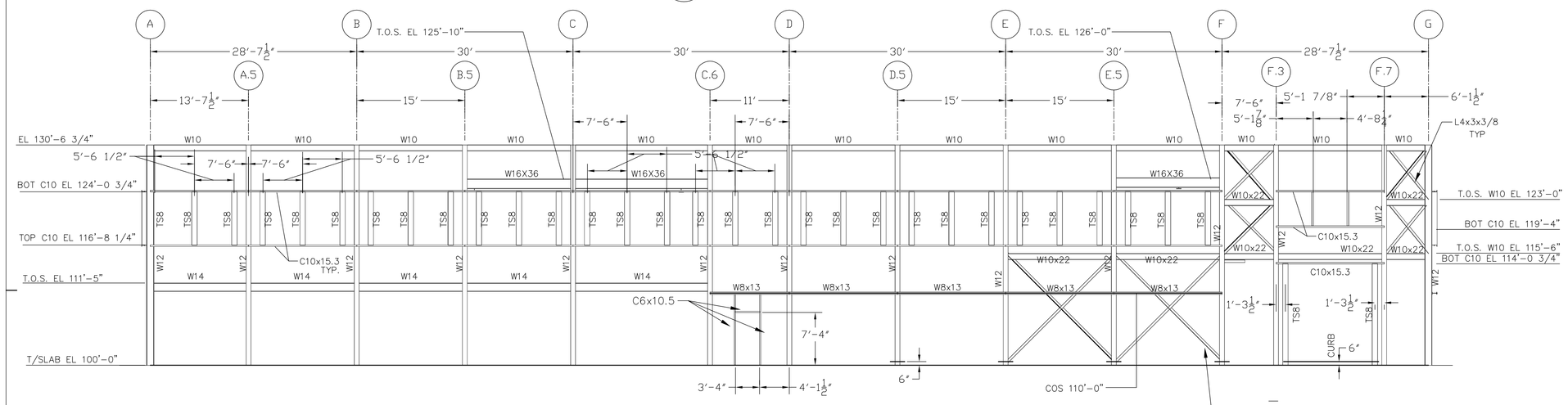

2 NORTHWEST ELEVATION
SCALE: 1/8" = 1'-0"

UTILITY BLDG. 2A
FRAMING
ELEVATIONS
DPK

450 S601
4SUT3A
12/06/90 14:57:14

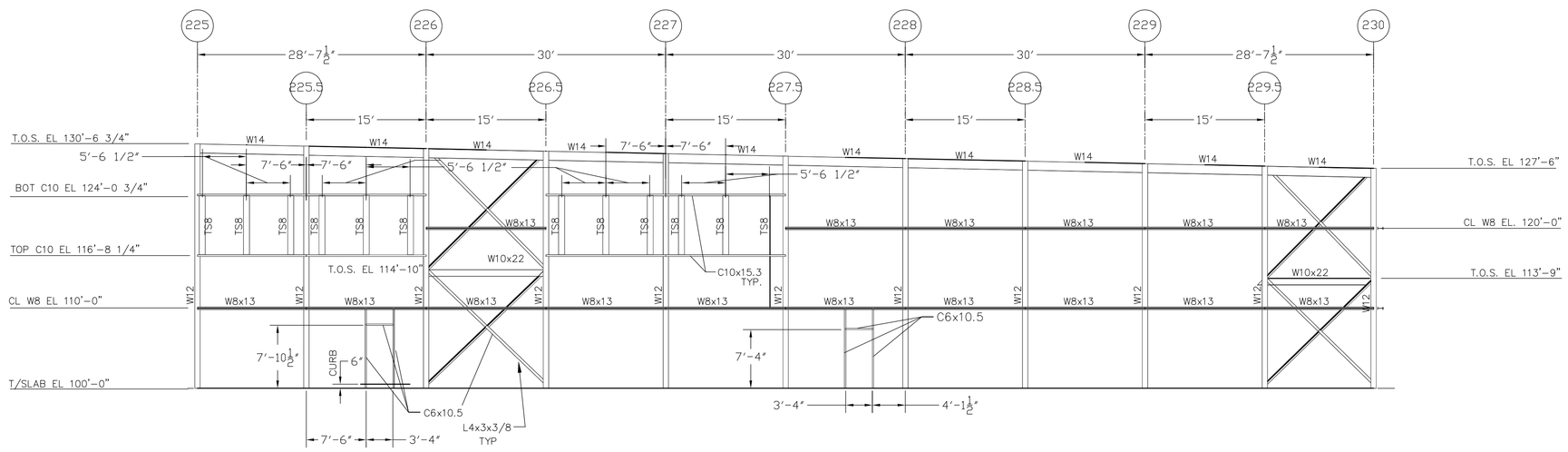

3 SOUTHWEST ELEVATION
SCALE: 1/8" = 1'-0"

UTILITY BLDG. 2A
FRAMING
ELEVATIONS
DPK

450 S601
4SUT3A
12/06/90 14:57:14

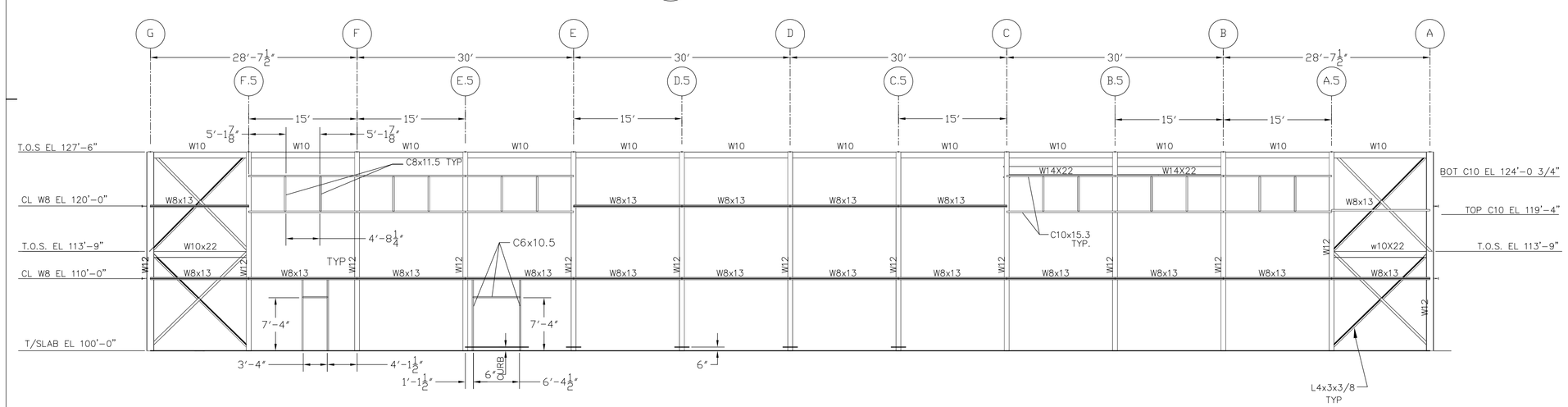

4 SOUTHEAST ELEVATION
SCALE: 1/8" = 1'-0"

NOTES:

1. ALL DIMENSIONS REGARDING STRUCTURAL TUBES (TS) ARE CENTER LINE TO CENTER LINE UNLESS NOTED OTHERWISE
2. SEE ARCHITECTURAL DRAWINGS FOR SIZE OF TS SECTIONS AT OVERHEAD DOORS AND AT LOUVERS

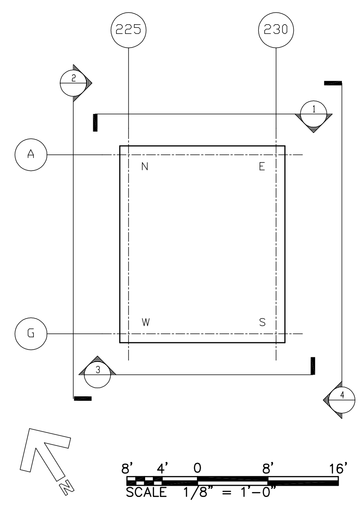

Advanced Photon Source
ARGONNE NATIONAL LABORATORY

KNIGHT

ARCHITECTURE & ENGINEERING

KNIGHT ARCHITECTS ENGINEERS PLANNERS, INC.

549 West Randolph Street
Chicago, IL 60606

CONSULTANTS

STRUCTURAL ENGINEERING
Tudor Engineering Company
Consulting Engineers and Planners
1800 Harrison St.
Oakland, CA 94612

CIVIL ENGINEERING
Globetrotters
Engineering Corporation
Consulting Engineers
300 South Wacker Drive
Chicago, IL 60606

VIBRATION AND ACOUSTICS
Acentech Incorporated
Acoustical & Environmental Technologies
21120 Vanowen Street
Canoga Park, CA 91303

ELEVATIONS

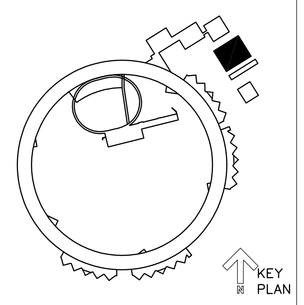

UTILITY BLDG. 2A

REV. NO.	DOCUMENT CHANGE NOTICE	BY	APVD	DATE

THIS DRAWING IS THE PROPERTY OF
ARGONNE NATIONAL LABORATORY

PROJECT TITLE
ADVANCED PHOTON SOURCE
CONVENTIONAL FACILITIES
PROJECT NO. ANL 01907 KNIGHT 4900

DOCUMENT TITLE
FRAMING ELEVATIONS
OUTSIDE VIEWS

DRAWN BY A/E- AJS ANL-	PROJECT MANAGER A/E- R. MELLOTT DATE- 12-07-90	BINDING ORDER
DESIGNED BY A/E- ANL-	PROJECT MANAGER ANL-	FACILITY NO(S)
CHECKED BY A/E- JLV ANL-	ANL APPROVAL DATE 12-15-00	
MSTR. DISK ID / VOL. NO.	FILE NAME S-004 / STATUS	

FACILITY DOCUMENT NUMBER
JO 450-001W -
WBS DOCUMENT NUMBER
750000-25 -

PLOT DATE PLOT 0 PLOT SCALE 1/8" = 1'-0" FILENAME:

PACKAGE: UTILITY BLDG. 2A