PACKAGE
Title1
Title2
USERNAME

AREA1 AREA3
Filename
Date _ Time

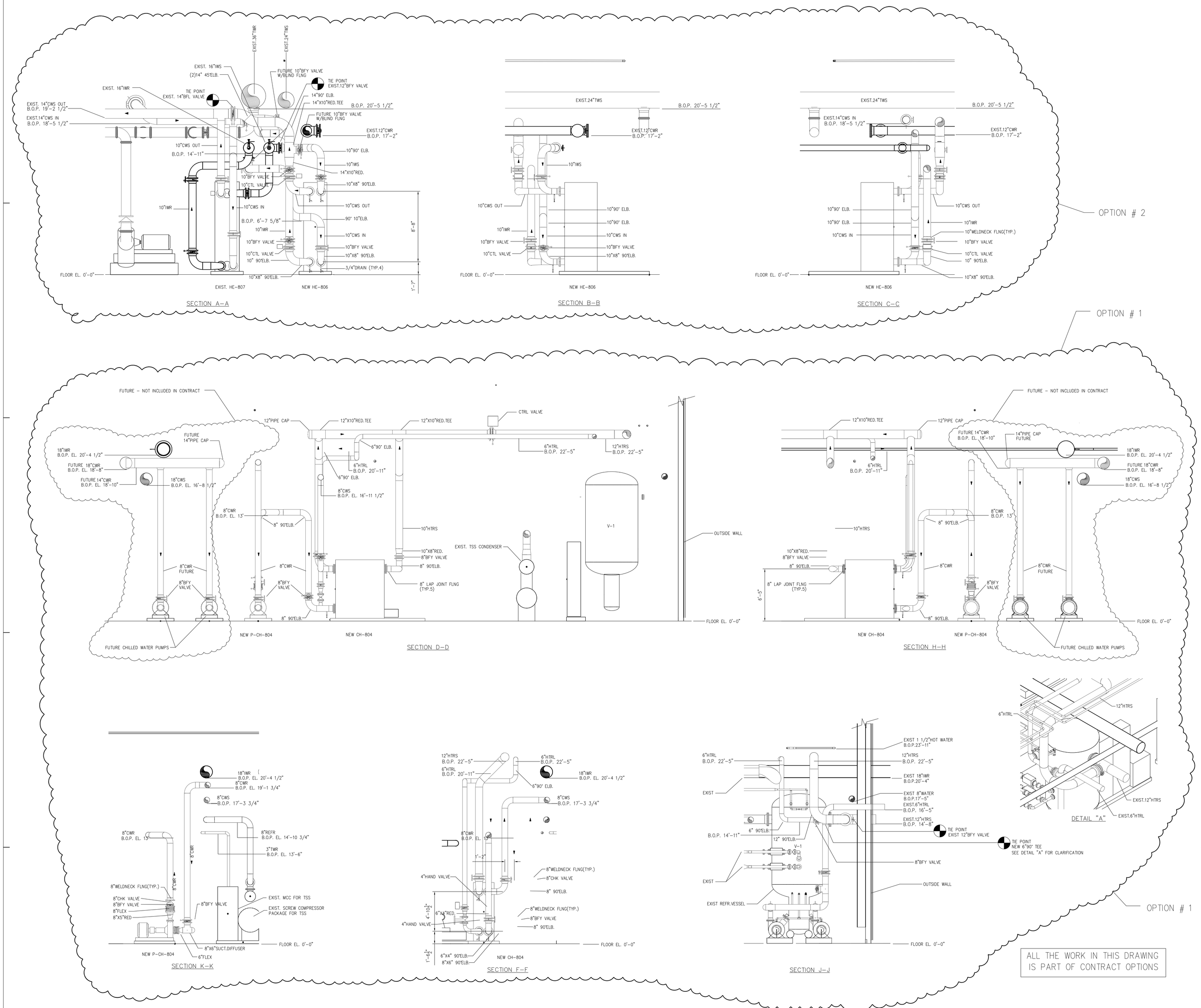

PIPING SECTIONS
SCALE 1/4"=1'–0"

SCALE 1'4" = 1'–0"

Advanced Photon Source
ARGONNE NATIONAL LABORATORY

Piping Design Consultants
200 E. HOWARD
Suite 236
DesPlaines, Illinois,60018

847–795–9800

LEVEL 1

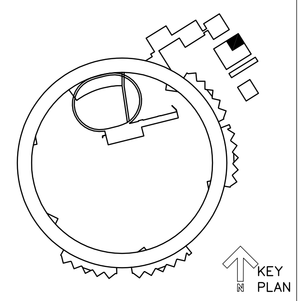

UTILITY BLDG. 450

THIS DRAWING IS THE PROPERTY OF
ARGONNE NATIONAL LABORATORY

PROJECT TITLE
ADVANCED PHOTON SOURCE
CONVENTIONAL FACILITIES
PROJECT NO. ANL 01907 KNIGHT 4900
DOCUMENT TITLE
Piping Sections
P104

DRAWN BY A/E– ANL–	PROJECT MANAGER A/E– DATE–11–29–00	BINDING ORDER
DESIGNED BY A/E– ANL–	PROJECT MANAGER ANL–	FACILITY NO(S)
CHECKED BY A/E– ANL–	ANL APPROVAL DATE	
MSTR. DISK ID / VOL. NO.	FILE NAME P104 / STATUS	

FACILITY DOCUMENT NUMBER
JO 411 –001W –
WBS DOCUMENT NUMBER
7103 001

PLOT DATE Date _ Time PLOT PLT_NUM PLOT SCALE 1/4"=1'–0" FILENAME: Filename PACKAGE: