PACKAGE
Title1
Title2
USERNAME

AREA1 AREA3
Filename
Date _ Time

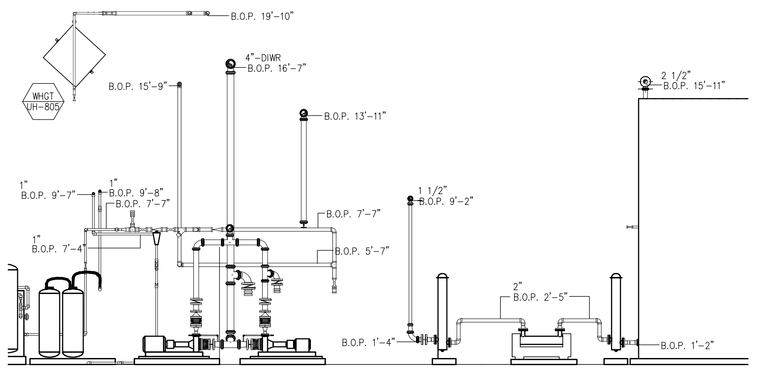

SECTION A1 R101SE
1/4"=1'-0"

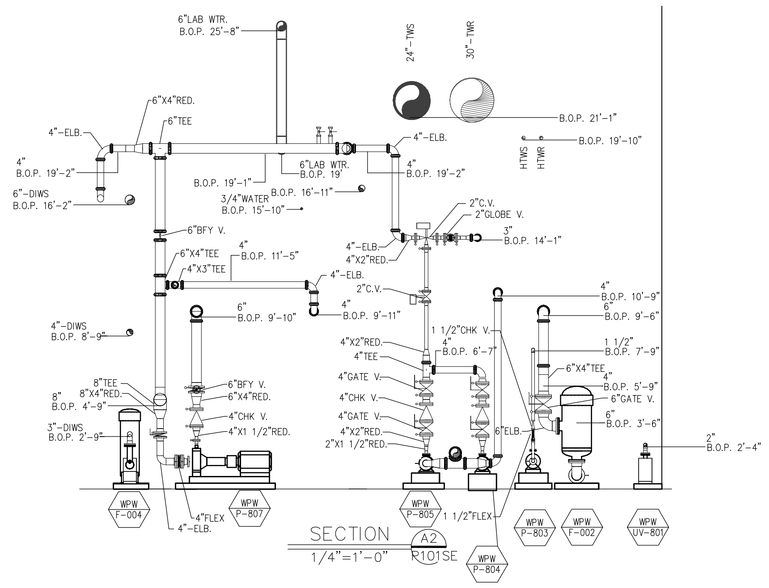

SECTION A2 R101SE
1/4"=1'-0"

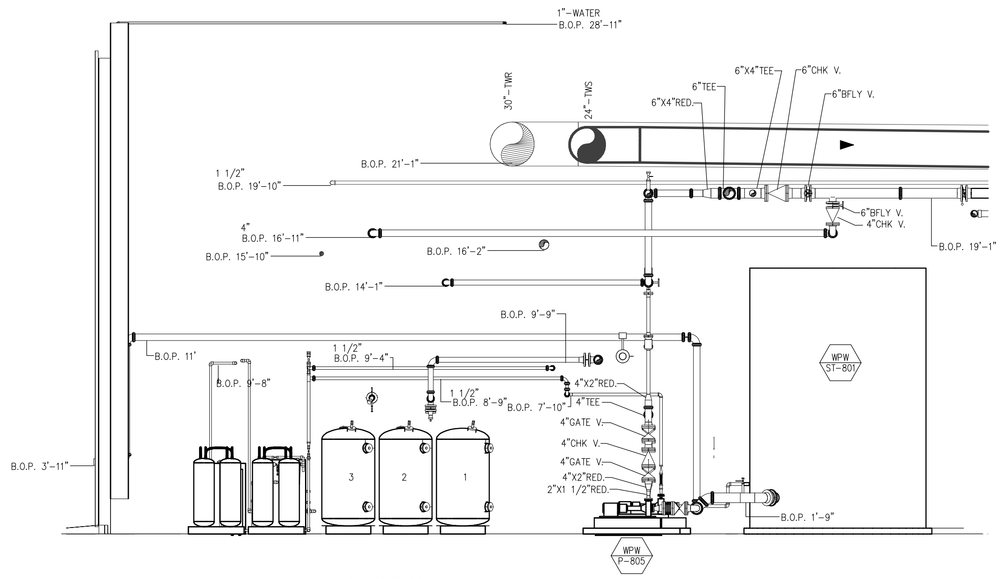

SECTION A3 R101SE
1/4"=1'-0"

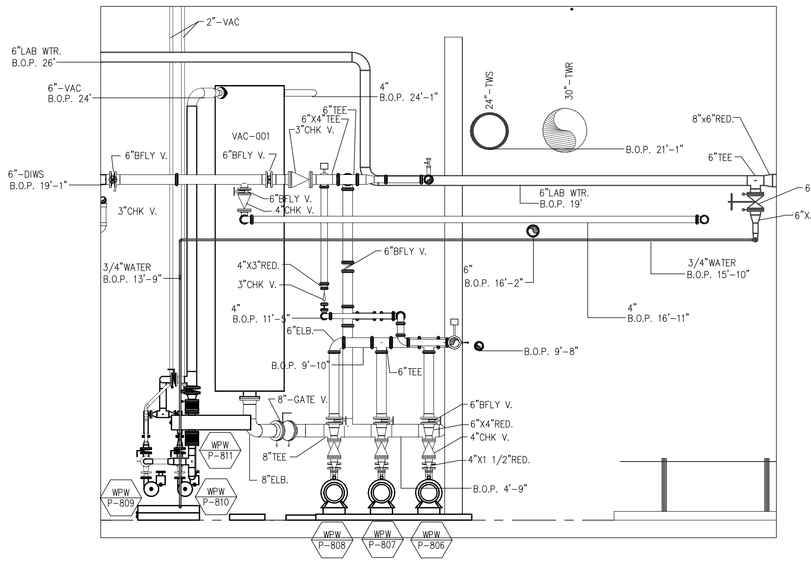

SECTION A4 R101SE
1/4"=1'-0"

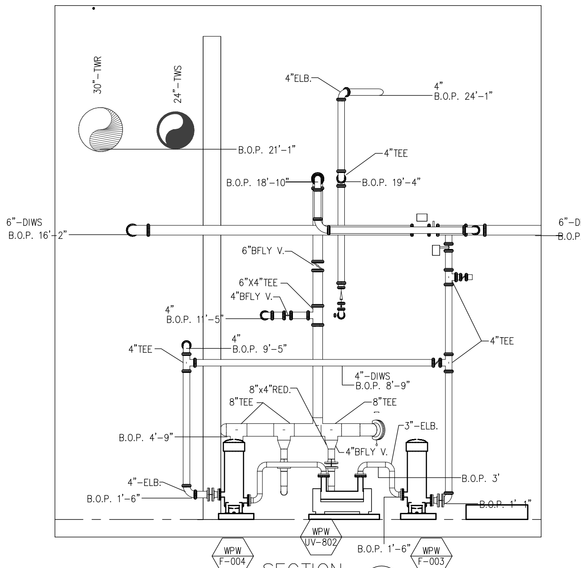

SECTION A5 R101SE
1/4"=1'-0"

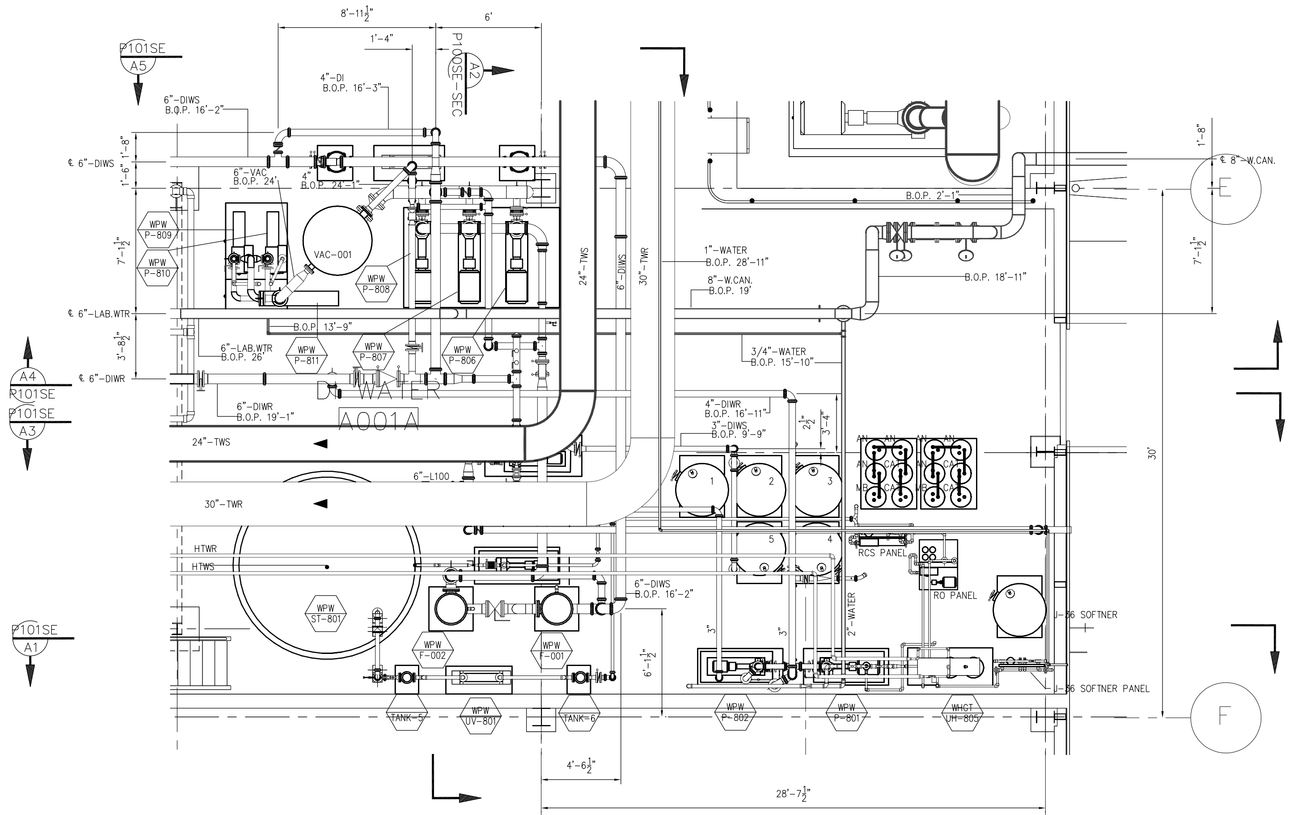

DI WATER PIPING PLAN-SE
229 230

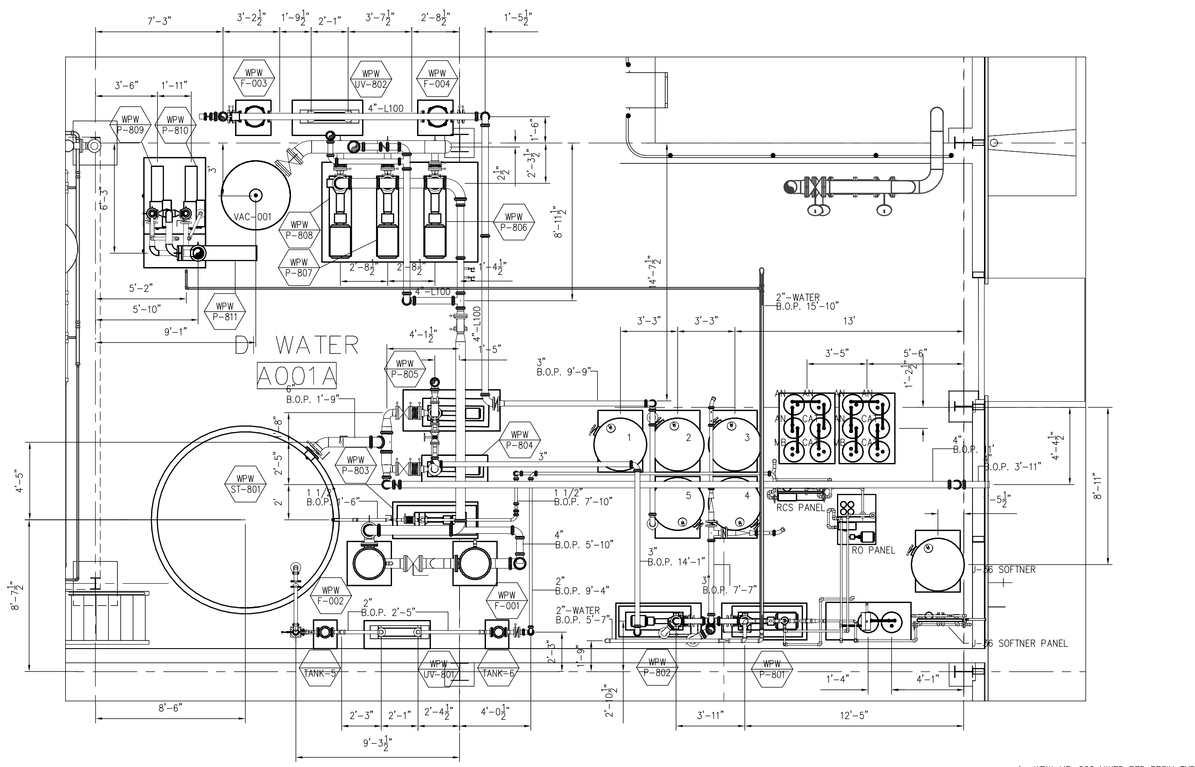

DI WATER LOWER PIPING PLAN- 16'-0" -SE

DI WATER PIPING PLAN-SE
SCALE 1/4"=1'-0"

PRELIMINARY
FOR REVIEW ONLY

SCALE 1/4" = 1'-0"

1- WPW-MB-002 MIXED BED RESIN TYPE 2 ANION
2- WPW-MB-001 MIXED BED RESIN TYPE 2 ANION
3- WPW-DO-002 OXYGEN SCAVENGER
4- WPW-DO-001 OXYGEN SCAVENGER
5- WPW-MB-003 MIXED BED RESIN TYPE 2 ANION

Advanced Photon Source
ARGONNE NATIONAL LABORATORY


Piping Design Consultants
200 E. HOWARD
Suite 236
DesPlaines, Illinois,60018

847-795-9800


LEVEL 1

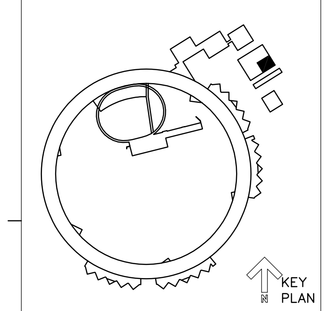

KEY PLAN

UTILITY BLDG. 450

THIS DRAWING IS THE PROPERTY OF
ARGONNE NATIONAL LABORATORY

PROJECT TITLE
ADVANCED PHOTON SOURCE
CONVENTIONAL FACILITIES
PROJECT NO. ANL 01907 KNIGHT 4900

DOCUMENT TITLE
DI Water Piping Plan
P101SE

| | | |
|---|---|---|
| DRAWN BY A/E- ANL- | PROJECT MANAGER A/E- DATE-07-10-00 | BINDING ORDER |
| DESIGNED BY A/E- ANL- | PROJECT MANAGER ANL- | FACILITY NO(S) |
| CHECKED BY A/E- ANL- | ANL APPROVAL DATE | |
| MSTR. DISK ID / VOL. NO. | FILE NAME P101SE / STATUS | |

FACILITY DOCUMENT NUMBER
JO 411 -001W -
WBS DOCUMENT NUMBER
7103 001

PACKAGE:

PLOT DATE Date _ Time PLOT PLT_NUM PLOT SCALE 1/4"=1'-0" FILENAME: Filename