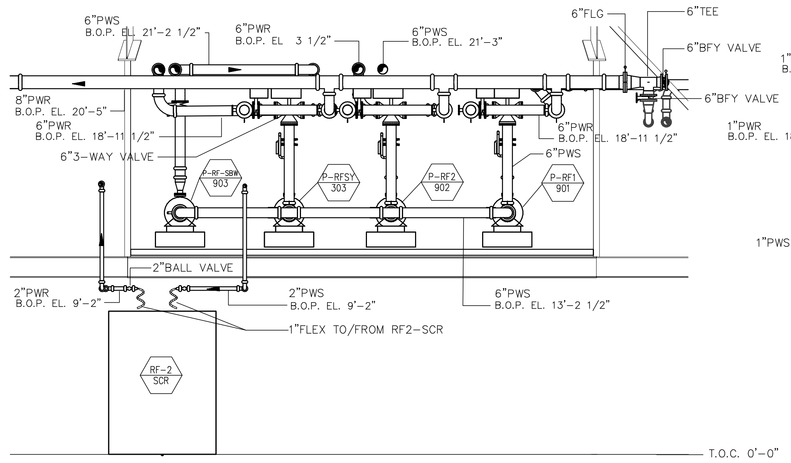

SECTION A P107
1/4"=1'-0"

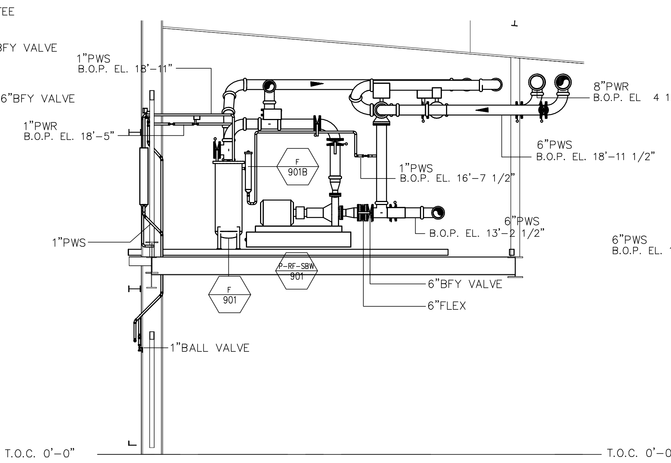

SECTION B P107
1/4"=1'-0"

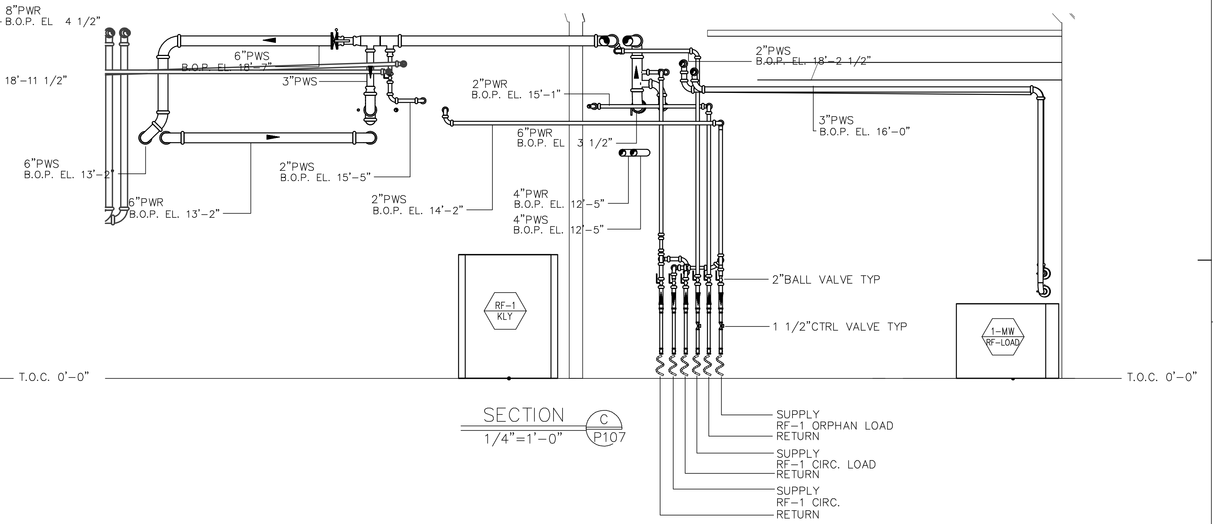

SECTION C P107
1/4"=1'-0"

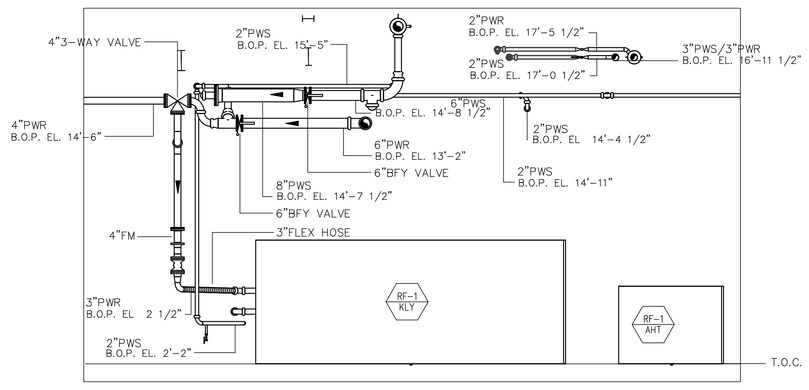

SECTION D P107
1/4"=1'-0"

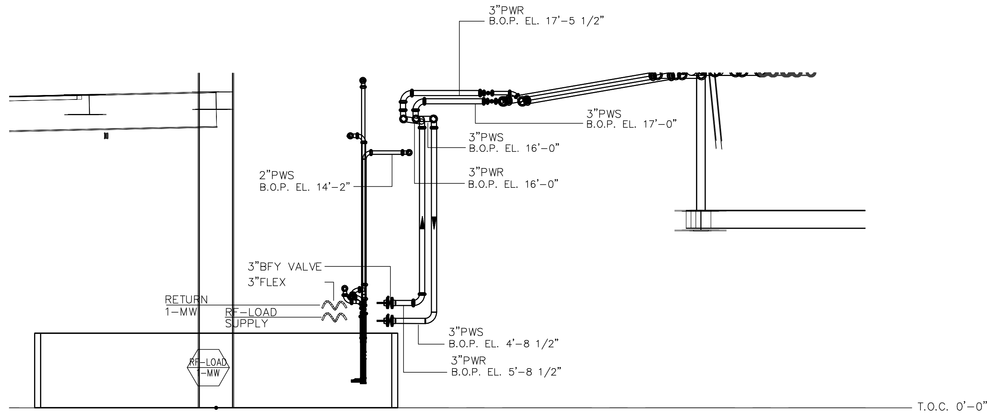

SECTION E P107
1/4"=1'-0"

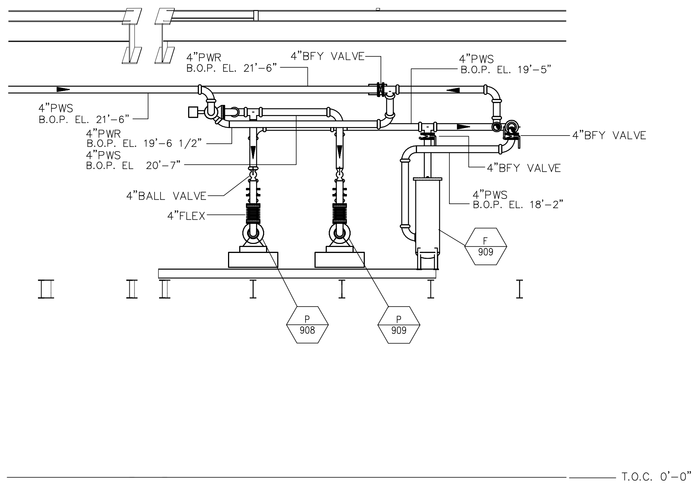

SECTION G P108
1/4"=1'-0"

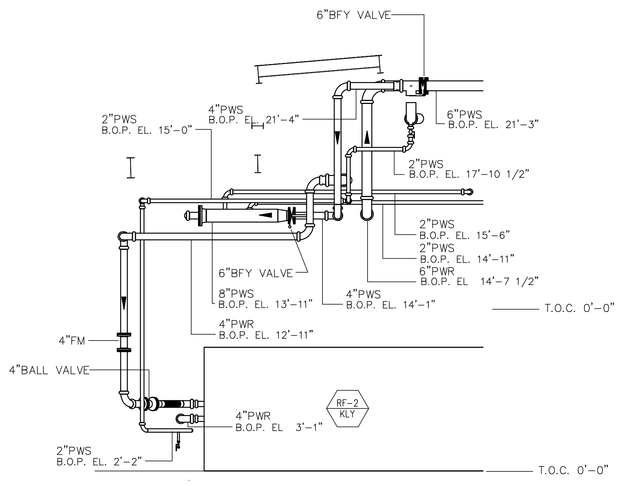

SECTION H P107
1/4"=1'-0"

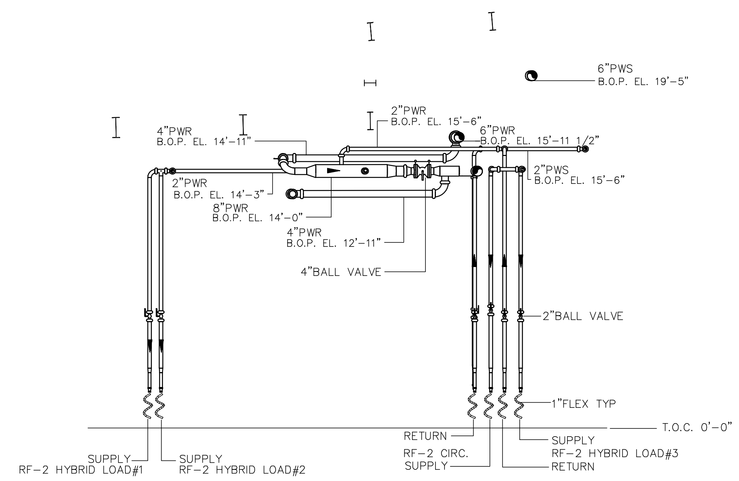

SECTION J P108
1/4"=1'-0"

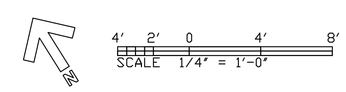

Advanced Photon Source
ARGONNE NATIONAL LABORATORY

Piping Design Consultants
200 E. HOWARD
Suite 236
DesPlaines, Illinois,60018

847-795-9800

LEVEL 1

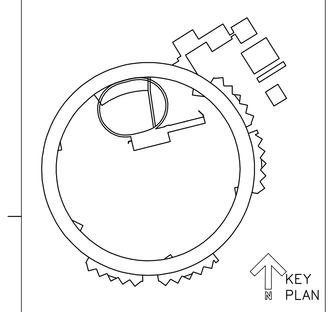

RF BLDG. 420

THIS DRAWING IS THE PROPERTY OF
ARGONNE NATIONAL LABORATORY

PROJECT TITLE
ADVANCED PHOTON SOURCE
CONVENTIONAL FACILITIES
PROJECT NO. ANL 01907 KNIGHT 4900
DOCUMENT TITLE
PROCESS PIPING-SECTIONS
P110

DRAWN BY A/E- ANL-	PROJECT MANAGER A/E- DATE07-30-90	BINDING ORDER
DESIGNED BY A/E- ANL-	PROJECT MANAGER ANL-	FACILITY NO(S)
CHECKED BY A/E- ANL-	ANL APPROVAL DATE	
MSTR. DISK ID / VOL. NO.	FILE NAME Filename / STATUS	

FACILITY DOCUMENT NUMBER
JO 411 -001WA A000
WBS DOCUMENT NUMBER
7103 001 AA