GOULDS PUMPS

Installation, Operation and Maintenance Instructions

ANSI FAMILY

Goulds Pumps

ITT Industries

Pump Safety Tips

Safety Apparel:

- Insulated work gloves when handling hot bearings or using bearing heater
- Heavy work gloves when handling parts with sharp edges, especially impellers
- Safety glasses (with side shields) for eye protection, especially in machine shop areas
- Steel-toed shoes for foot protection when handling parts, heavy tools, etc.
- Other personal protective equipment to protect against hazardous/toxic fluids

Coupling Guards:

- Never operate a pump without a coupling guard properly installed

Flanged Connections:

- Never force piping to make a connection with a pump
- Use only fasteners of the proper size and material
- Ensure there are no missing fasteners
- Beware of corroded or loose fasteners

Operation:

- Do not operate below minimum rated flow, or with suction/discharge valves closed
- Do not open vent or drain valves, or remove plugs while system is pressurized

Maintenance Safety:

- Always lock out power
- Ensure pump is isolated from system and pressure is relieved before disassembling pump, removing plugs, or disconnecting piping
- Use proper lifting and supporting equipment to prevent serious injury
- Observe proper decontamination procedures
- Know and follow company safety regulations

Observe all cautions and warnings highlighted in pump *Installation, Operation and Maintenance Instructions.*

FOREWORD

This manual provides instructions for the Installation, Operation, and Maintenance of the Goulds Models 3196, CV 3196, HT 3196, LF 3196, NM 3196, 3198, and 3796. This manual covers the standard product plus common options that are available. For special options, supplemental instructions are supplied. **This manual must be read and understood before installation and start-up.**

This instruction manual covers several different pump models that all have a common power end. Most assembly, disassembly, and inspection procedures are the same for all the pumps. However, where there are differences, they are called out separately within the manual. The design, materials, and workmanship incorporated in the construction of Goulds pumps makes them capable of giving long, trouble-free service. The life and satisfactory service of any mechanical unit, however, is enhanced and extended by correct application, proper installation, periodic inspection, condition monitoring and careful maintenance. This instruction manual was prepared to assist operators in understanding the construction and the correct methods of installing, operating, and maintaining these pumps.

Goulds shall not be liable for physical injury, damage, or delays caused by a failure to observe the instructions for installation, operation, and maintenance contained in this manual.

When intalled in potentially explosive atmospheres, the instructions that follow the Ex symbol must be followed. Personal injury and/or equipment damage may occur if these instructions are not followed. If there is any question regarding these requirements or if the equipment is to be modified, please contact a Goulds representative before proceeding.

Warranty is valid only when genuine Goulds parts are used.

Use of the equipment on a service other than stated in the order will nullify the warranty, unless written approval is obtained in advance from Goulds Pumps.

Supervision by an authorized Goulds representative is recommended to assure proper installation.

Additional manuals can be obtained by contacting your local Goulds representative or by calling 1-800-446-8537.

THIS MANUAL EXPLAINS

- **Proper Installation**
- **Start-up Procedures**
- **Operation Procedures**
- **Routine Maintenance**
- **Pump Overhaul**
- **Trouble Shooting**
- **Ordering Spare or Repair Parts**

TABLE OF CONTENTS

PAGE		SECTION
7	SAFETY	1
11	GENERAL INFORMATION	2
19	INSTALLATION	3
35	OPERATION	4
45	PREVENTIVE MAINTENANCE	5
53	DISASSEMBLY & REASSEMBLY	6
109	SPARE AND REPAIR PARTS	7
117	APPENDIX	8

117	I	Frame Lubrication Conversion
121	II	Installation Instructions for Goulds ANSI B15.1 Coupling Guards
125	III	Set Up and Alignment
129	IV	Labyrinth Seal Installation Instructions
131	V	C-Face Adapter Installation Instructions
133	VI	3198 Teflon® Sleeve Field Replacement Procedure
135	VII-1	Double Row Angular Contact Bearing Installation Instructions
137	VII-2	Duplex Angular Contact Bearing Installation Instructions
139	VIII	Inpro Labyrinth Oil Seal Installation Instructions

SAFETY

DEFINITIONS 7
GENERAL PRECAUTIONS. 7

DEFINITIONS

These pumps have been designed for safe and reliable operation when properly used and maintained in accordance with instructions contained in this manual. A pump is a pressure containing device with rotating parts that can be hazardous. Operators and maintenance personnel must realize this and follow safety measures. Goulds Pumps shall not be liable for physical injury, damage or delays caused by a failure to observe the instructions in this manual.

Throughout this manual the words **WARNING**, **CAUTION**, **ELECTRICAL, ATEX**, and **NOTE** are used to indicate procedures or situations which require special operator attention:

WARNING

Operating procedure, practice, etc. which, if not correctly followed, could result in personal injury or loss of life.

CAUTION

Operating procedure, practice, etc. which, if not followed, could result in damage or destruction of equipment.

If equipment is to be installed in a potentially explosive atmosphere and these procedures are not followed, personal injury or equipment damage from an explosion may result.

Particular care must be taken when electrical power source to the equipment is energized.

NOTE: Operating procedure, condition, etc. which is essential to observe.

EXAMPLES

WARNING

Pump shall never be operated without coupling guard installed correctly.

CAUTION

Throttling flow from the suction side may cause cavitation and pump damage.

Improper impeller adjustment could cause contact between the rotating and stationary parts, resulting in a spark and heat generation.

Lock out driver power to prevent electric shock, accidental start-up and physical injury.

NOTE: Proper alignment is essential for long pump life.

GENERAL PRECAUTIONS

WARNING

Personal injuries will result if procedures outlined in this manual are not followed.

	⚠	NEVER apply heat to remove impeller. It may explode due to trapped liquid.
	⚠	NEVER use heat to disassemble pump due to risk of explosion from trapped liquid.
Ex	⚠	NEVER operate pump without coupling guard correctly installed.
Ex	!	NEVER operate pump beyond the rated conditions to which the pump was sold.
Ex	!	NEVER start pump without proper prime (all models), or proper liquid level in self-priming pumps (Model 3796).
Ex	!	NEVER run pump below recommended minimum flow or when dry.
⚠	⚠	ALWAYS lock out power to the driver before performing pump maintenance.
	⚠	NEVER operate pump without safety devices installed.
Ex	⚠	NEVER operate pump with discharge valve closed.
Ex	!	NEVER operate pump with suction valve closed.
	Ex	DO NOT change conditions of service without approval of an authorized Goulds representative.

EXPLOSION PREVENTION

Ex

In order to reduce the possibility of accidental explosions in atmospheres containing explosive gasses and/or dust, the instructions under the ATEX symbol must be closely followed. ATEX certification is a specification enforced in Europe for non- electrical and electrical equipment installed in Europe. The usefulness of the ATEX requirements are not limited to Europe, and are useful guidelines for equipment installed in any potentially explosive environment.

SPECIAL ATEX CONSIDERATIONS

All installation and operation instructions in this manual must be strictly adhered to. In addition, care must be taken to ensure that the equipment is properly maintained. This includes but is not limited to:

1. Monitoring the pump frame and liquid end temperature.
2. Maintaining proper bearing lubrication.
3. Ensuring that the pump is operated in the intended hydraulic range.

ATEX IDENTIFICATION

For a pumping unit (pump, seal, coupling, motor and pump accessories) to be certified for use in an ATEX classified environment, the proper ATEX identification must be present.

The ATEX tag would be secured to the pump or the baseplate on which it is mounted. A typical tag would look like this:

The CE and the Ex designate the ATEX compliance. The code directly below these symbols reads as follows:

II	=	Group 2
2	=	Category 2
G/D	=	Gas and Dust present
T4	=	Temperature class, can be T1 to T6 (see Table 1)

Table 1

Code	Max permissible surface temperature °F (°C)	Max permissible liquid temperature °F (°C)
T1	842 (450)	700 (372)
T2	572 (300)	530 (277)
T3	392 (200)	350 (177)
T4	275 (135)	235 (113)
T5	212 (100)	Option not available
T6	185 (85)	Option not available

The code classification marked on the equipment should be in accordance with the specified area where the equipment will be installed. If it is not, please contact your ITT/Goulds representative before proceeding.

INTENDED USE

The ATEX conformance is only applicable when the pump unit is operated within its intended use. All instructions within this manual must be followed at all times. Operating, installing or maintaining the pump unit in any way that is not covered in this manual can cause serious personal injury or damage to the equipment. This includes any modification to the equipment or use of parts not provided by ITT/Goulds. If there is any question regarding the intended use of the equipment, please contact an ITT/Goulds representative before proceeding.

CONDITION MONITORING

For additional safety precautions, and where noted in this manual, condition monitoring devices should be used. This includes, but is not limited to:

- Pressure gauges
- Flow meters
- Level indicators
- Motor load readings
- Temperature detectors
- Bearing monitors
- Leak detectors
- PumpSmart control system

For assistance in selecting the proper instrumentation and its use, please contact your ITT/Goulds representative.

GENERAL INFORMATION

PUMP DESCRIPTION 11
PARTS COMMONALITY 13
NAMEPLATE INFORMATION. 16
RECEIVING THE PUMP 17
Storage Requirements 17
Handling 17

PUMP DESCRIPTION

Model	Pump Description	Size Groups	No. of Sizes
3196	The model is based on 5 power ends and 29 hydraulic pump sizes. The 3196 is a horizontal overhung, open impeller, centrifugal pump that meets the requirements of ANSI B73.1.	STX MTX LTX XLT-X X-17	5 15 15 5 4
CV 3196	The model is based on four power ends and seven hydraulic pump sizes. The CV 3196 is a horizontal overhung, recessed impeller, centrifugal pump. It is specifically designed to handle bulky or fiberous solids, air or gas entrained liquids, or shear sensitive liquids.	STX MTX LTX XLT-X	1 4 5 1
HT 3196	The model HT 3196 is based on 4 power ends and 28 hydraulic pump sizes. The HT 3196 is a horizontal, centerline mounted, overhung, open impeller, centrifugal pump that meets the requirements of ANSI B73.1	STX MTX LTX XLTX	6 16 17 5
LF 3196	The model is based on 3 power ends and 4 hydraulic pump sizes. The LF 3196 is a horizontal overhung, open impeller, centrifugal pump that meets the requirements of ANSI B73.1. It is designed specifically for low flow high head applications.	STX MTX LTX	2 2 2
NM 3196	The model is based on 2 power ends and 13 hydraulic pump sizes. The NM 3196 is a horizontal overhung, open impeller, centrifugal pump that meets the requirements of ANSI B73.1. It is made of a fiber reinforced vinylester to handle severe corrosives.	STX MTX	5 8
3198	The model is based on 2 power ends and 4 hydraulic pump sizes. The 3198 is a horizontal overhung, open impeller, centrifugal pump that meets the requirments of ANSI B73.1. It is made of a Teflon® lined ductile iron to handle severe corrosives.	STX MTX	1 3
3796	The model is based on 3 power ends and 8 hydraulic pump sizes. The 3796 is a horizontal overhung, self priming, open impeller, centrifugal pump.	STX MTX LTX	2 6 6

This Page Intentionally Left Blank

ANSI Family Parts Commonality

All of Goulds Pumps horizontal ANSI pumps are based on the same power end. All of the metallic units share the same stuffing box covers and seal chambers. The non-metallic units all have unique casings, impellers, and seal chambers. The chart on the following pages demonstrates the parts commonality and the relationship between the model lines.

Model	Casing	Impeller
3196	The casing is top centerline discharge and self-venting. The gasket is fully confined. An integral foot support is used for maximum resistance to misalignment and distortion from piping loads. ANSI flat faced serrated flanges are standard. ANSI class 150 raised face serrated, ANSI class 300 flat face serrated, and ANSI class 300 raised face serrated are available.	The impeller is fully open and threaded to the shaft. The threads are sealed from the pumpage by a Teflon® O-ring for the 3196 and 3796. The HT 3196 uses a Graphite O-ring.
3796	The casing is top centerline discharge and self-venting. It has an integrally cast priming chamber that allows the pump to evacuate air to prime itself. The gasket is fully confined. An integral foot support is used for maximum resistance to misalignment and distortion from piping loads. ANSI class 150 raised face serrated flanges are available as an option. The casing comes with a provision to accept an immersion heater to keep the liquid in the priming chamber from freezing in outdoor applications.	
HT 3196	The casing is top centerline discharge, self-venting, and centerline mounted. The casing support is used for maximum resistance to misalignment and distortion from thermal piping loads. The centerline mounted casing maintains vertical alignment at elevated temperatures. ANSI class 300 raised face serrated flanges are standard.	
CV 3196	The casing is tangential discharge and available with optional connections for venting, flushing, and solids cleanout. The gasket is fully confined. An integral foot support is used for maximum resistance to misalignment and distortion from piping loads. ANSI class 150 flat face serrated flanges are standard on all sizes.	The impeller is fully open and recessed from the casing. It has curved vanes and is threaded to the shaft. The threads are sealed from the pumpage by a Teflon® O-ring.
LF 3196	The casing is top centerline discharge and self-venting. The gasket is fully confined An integral foot support is used for maximum resistance to misalignment and distortion from piping loads. ANSI class 150 rasied face serrated flanges are stanard on 4, 8, and 10" sizes. ANSI class 300 raised face serrated flange are standard on the 13" size and optional on 4, 8, and 10" sizes.	The impeller is fully open with radial vanes and balance holes. The impeller is threaded to the shaft and sealed from the pumpage by a Teflon® O-ring.
NM 3196	The casing is top centerline discharge and self-venting. It is constructed from a fiber reinforced vinylester that is ribbed for strength. It is sealed using a Viton® O-ring as standard. An integral foot support is used for maximum resistance to misalignment and distortion from piping loads. ANSI class 150 flat face flanges are standard.	The impeller is fully open and threaded to the shaft. It is a fiber reinforced vinylester over a Hastelloy C insert that provides support and rigidity to the impeller while securing it to the shaft. The threads are sealed from the pumpage by a Teflon® O-ring.
3198	The casing is top centerline discharge and self-venting. The ductile iron casing is lined with PFA Teflon® for corrosion resistance and is offered with ANSI class 150 raised face flanges. The casing gasket is a Teflon® envelope with a compressible filler that provides a positive seal with low bolt torque.	The impeller is fully open and threaded to the shaft. It is constructed of a PFA Teflon® covered steel insert. The insert provides support and rigidity to the impeller while securing it to the shaft. The threads are sealed from the pumpage by a Teflon® O-ring.

The 3196, CV 3196, HT 3196, LF 3196, and 3796 are available with a stuffing box cover designed for packing and BigBore™ or TaperBore™ *PLUS* seal chambers for improved performance of mechanical sales.

An optional dynamic seal is available which uses a repeller to pump liquid out of the stuffing box while the pump operates. A static seal prevents leakage when the pump is shutdown.

The NM 3196 is supplied with a fiber reinforced vinylester backplate to accommodate a clamped outside single seal. The backplate is also available with an internal bypass flush. An optional bolt on seal chamber is available for conventional back-to-back double seals.

The 3196 is supplied with a PFA Teflon® lined backplate to accommodate a clamped outside single seal. Also available for the backplate is a bolt-on metallic seal chamber for conventional back-to-back double seals. An optional PFA Teflon® lined standard bore stuffing box cover is available for conventional single clamped seat inside or outside seals. For cartridge seals, an ETFE Tefzel® lined BigBore™ seal chamber is available.

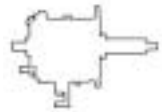

Frame Adapter - The ductile iron frame adapter has a machined rabbet fit to the seal chamber/ stuffing box cover and a precision dowel pin fit to the bearing frame. The 3198 frame adapter has the same features but different dimensions to accommodate the pump's Teflon® lining.

Power End - The oil level is viewed through a sight glass. Optional oil cooling is provided by a finned tube cooler. A finned tube cooler is standard with HT 3196. Flood oil lubrication is standard. The power end is sealed with non-metallic labyrinth seals. No machining is requried to convert from oil to grease or oil mist lubrication. Regresable bearings and oil mist lubrication are optional.

Shaft - The shaft is available with or without a sleeve. When supplied with a Teflon® sleeve, the 3198 shaft is knurled under the sleeve to provide a positive drive for the sleeve.

Bearings - The inboard bearing carries only radial loads. It is free to float axially in the frame. The outboard bearing is shouldered and locked to the shaft and housing to enable it to carry radial and thrust loads. All fits are precision machined to industry standards. The inboard bearing is a single row deep groove ball bearing. The outboard bearing is a double row angular contact bearing, except for the LTX which uses a pair of single row angular contact ball bearings mounted back-to-back.

NAMEPLATE INFORMATION

Every pump has two Goulds nameplates that provide information about the pump. The tags are located on the casing and bearing frame.

When ordering spare parts, you will need to identify pump model, size, serial number, and the item number of required parts. Information can be taken from the pump casing tag. Item numbers can be found in this manual.

Description	Fig. No.	Example
Pump Casing Tag - provides information about the pump's hydraulic characteristics. Note the format of the pump size: Discharge x Suction - Nominal maximum Impeller Diameter in inches. (Example: 2x3-8) (Figs. 1 & 2).	**Fig. 1 English**	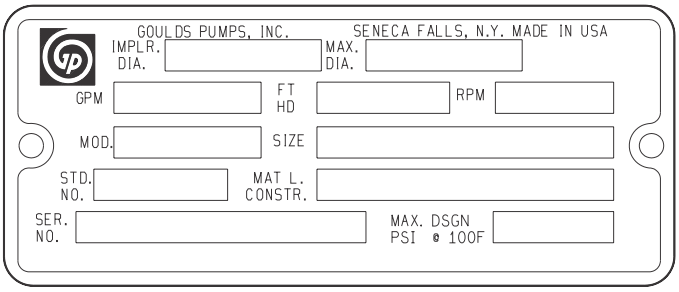
	Fig. 2 Metric	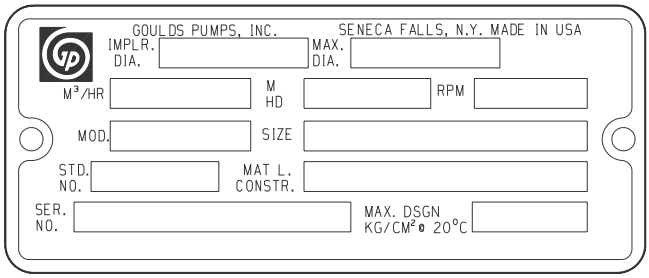
Bearing Frame Tag - provides information on the lubrication system used (Fig. 3).	**Fig. 3**	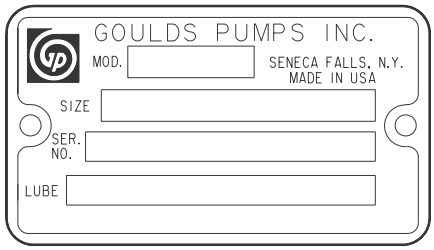
ATEX Tag - If applicable, your pump unit may have the following ATEX tag affixed to the pump and/or baseplate. See the Safety section for a description of the symbols and codes (Fig. 4).	**Fig. 4**	

RECEIVING THE PUMP

Inspect the pump as soon as it is received. Carefully check that everything is in good order. Make notes of damaged or missing items on the receipt and freight bill. File any claims with the transportation company as soon as possible.

STORAGE REQUIREMENTS

Short Term: (Less than 6 months) Goulds normal packaging procedure is designed to protect the pump during shipping. Upon receipt, store in a covered and dry location.

Long Term: (More than 6 months) Preservative treatment of bearings and machined surfaces will be required. Rotate shaft several times every 3 months. Refer to driver and coupling manufacturers for their long term storage procedures. Store in a covered dry location.

NOTE: Long term storage treatment can be purchased with the initial pump order or can be applied to pumps already in the field that were not treated at the factory. This service can be supplied by contacting your local Goulds sales representative.

HANDLING

WARNING

Pump and components are heavy. Failure to properly lift and support equipment could result in serious physical injury or damage to pumps. Steel toed shoes must be worn at all times.

Use care when moving pumps. Lifting equipment must be able to adequately support the entire assembly. Hoist bare pump using a suitable sling, under the suction flange and bearing frame. Base-plate mounted units are moved with slings under the pump casing and driver. Refer to Figs. 4-7 for examples of proper lifting techniques.

WARNING

Refer to the Installation section of this manual for detailed instructions for lifting a Polyshield® ANSI Combo with installed equipment. Never lift a Polyshield® ANSI Combo with pump and motor mounted using the procedure shown in Fig. 5 and Fig. 6.

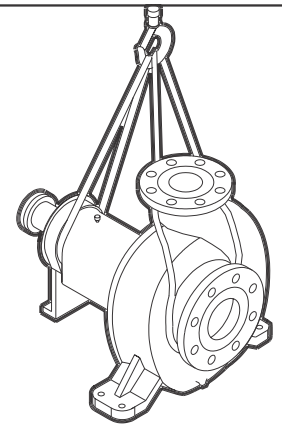

Fig. 4

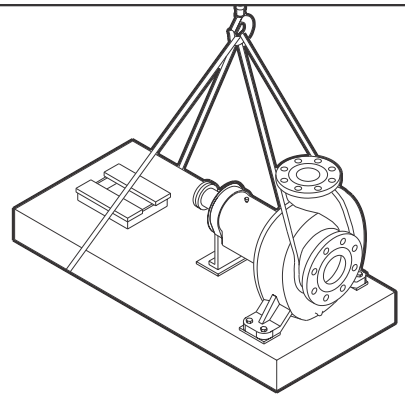

Fig. 5

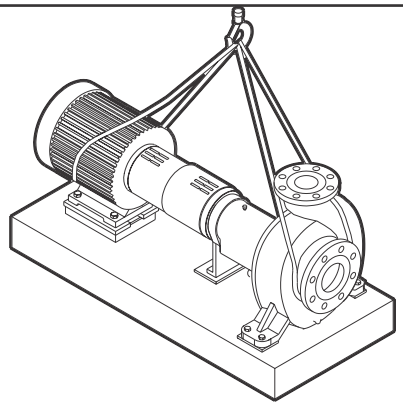

Fig. 6

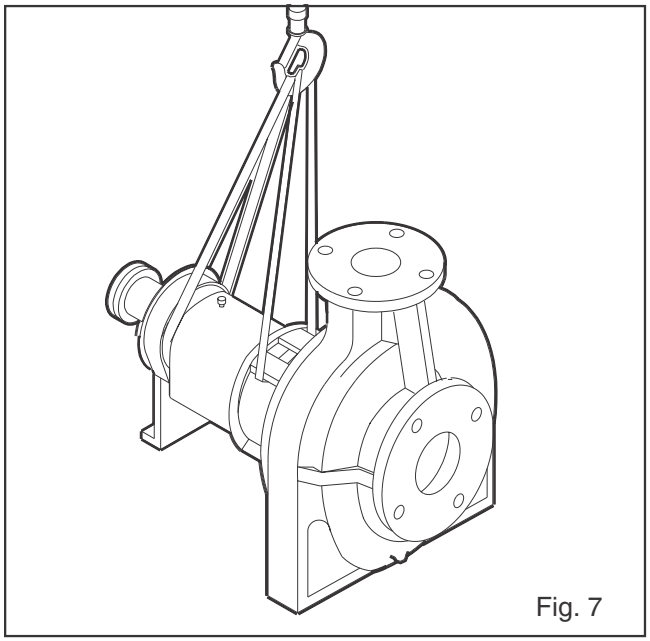

Fig. 7

NOTE: When lifting the NM 3196 or metallic units with integral suction flanges that do not have a way to secure the strap on the suction flange, the strap shown in Figures 4-6 around the suction flange should be secured around the frame adapter (Fig. 7).

INSTALLATION

BASEPLATE INSPECTION 19
SITE / FOUNDATION 19
LEVEL BASEPLATE 20
Cast Iron / PermaBase™ / Fab. Steel 20
Feature Fab. Steel /Advantage Base 21
Stilt Mounted 21
Spring Mounted 22
Polyshield® ANSI Combo 23
BASEPLATE LEVELING WORKSHEET 28
ALIGNMENT 29
Alignment Checks 29
Alignment Criteria 29
ALIGNMENT TROUBLESHOOTING 30
GROUT BASEPLATE 31
Alignment Check 31
PIPING 31
General 31
Suction Piping 32
Discharge Piping 34
Final Piping Check 34

3

Equipment that is to be installed in a potentially explosive environment must be done so in accordance with the following installation instructions.

BASEPLATE INSPECTION

1. Remove all equipment.
2. Completely clean the underside of baseplate. It is sometimes necessary to coat the underside of the baseplate with an epoxy primer. This may have been purchased as an option.
3. Remove the rust preventative solution from the machined pads with an appropriate solution.

SITE / FOUNDATION

A pump should be located near the supply of liquid and have adequate space for operation, maintenance, and inspection.

Baseplate mounted pumps are normally grouted on a concrete foundation, which has been poured on a solid footing.

The foundation must be able to absorb any vibration and to form a permanent, rigid support for the pumping unit. The location and size of the foundation bolt holes are shown on the outline assembly drawing, provided with the pump data package.

All equipment being installed must be properly grounded to prevent unexpected static electric discharge. This includes ensuring that the PFA lined pumps (Model 3198) and the non-metallic liquid end pumps (Model NM3196) are pumping fluids that are conductive. If not, a static electric discharge may occur when the pump is drained and disassembled for maintenance purposes.

Foundation bolts commonly used are sleeve type (Fig. 8) and J type (Fig. 9). Both designs permit movement for final bolt adjustment.

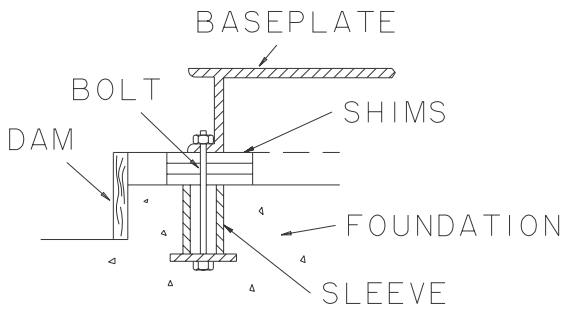

Fig. 8

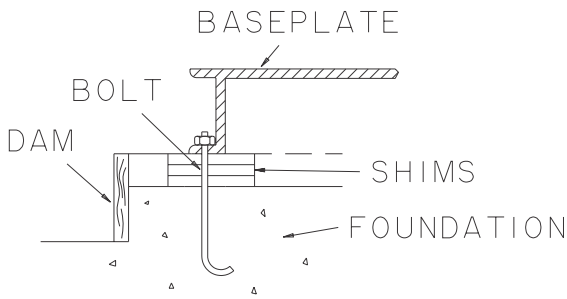

Fig. 9

1. Inspect foundation for dust, dirt, oil, chips, water, etc. and remove any contaminants. Do not use oil-based cleaners as grout will not bond to it.
2. Prepare the foundation in accordance with the grout manufacturer's recommendations.

LEVEL BASEPLATE

CAST IRON/PERMABASE™/FAB. STEEL

1. Place two sets of wedges or shims on the foundation, one set on each side of every foundation bolt. The wedges should extend .75 in. (20mm) to 1.50 in. (40mm) above foundation, to allow for adequate grouting. This will provide even support for the baseplate once it is grouted.
2. Remove water and/or debris from anchor bolt holes/sleeves prior to grouting. If the sleeve type bolts are being used, fill the sleeves with packing or rags to prevent grout from entering.

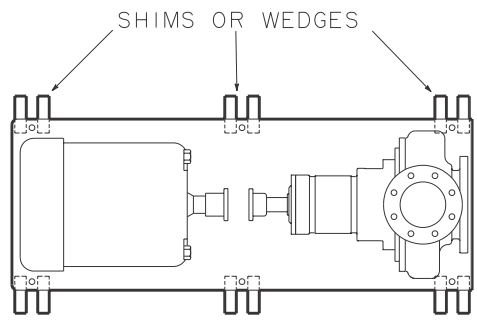

Fig. 10

3. Carefully lower baseplate onto foundation bolts.
4. Level baseplate to within .125 in. (3.2mm) over length of the baseplate and to within .088 in. (1.5mm) over the width of the base by adjusting wedges.
5. A level should be placed across the pump mounting pads and the motor mounting pads.
6. Hand tighten the bolts.

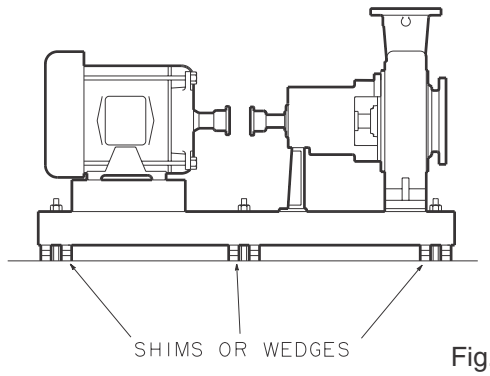

Fig. 11

FEATURE FAB. STEEL / ADVANTAGE BASE

(BASEPLATES PROVIDED WITH VERTICAL LEVELING ADJUSTERS)

1. Coat the jack screws with an anti-seizing compound to allow for easy removal after the grout has been cured.
2. Cut round circular plates from bar stock to set the jack screws on. The edges of the plates should be chamfered to reduce stress concentrations.
3. Set the baseplate on the foundation and use the four corner jack screws to raise the baseplate off the foundation 0.75" to 1.5". The two center jack screws should not be touching the foundation.

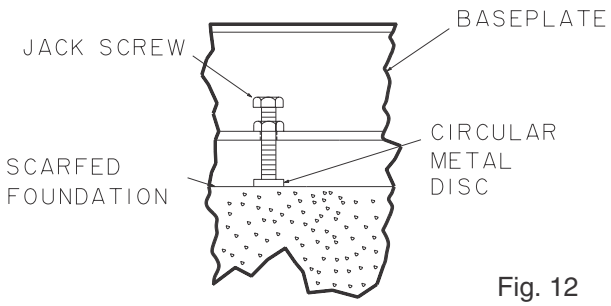

Fig. 12

4. Place two machinist levels on the motor pads, one lengthwise on a single motor pad, and another across the ends of both motor pads (Fig. 13).

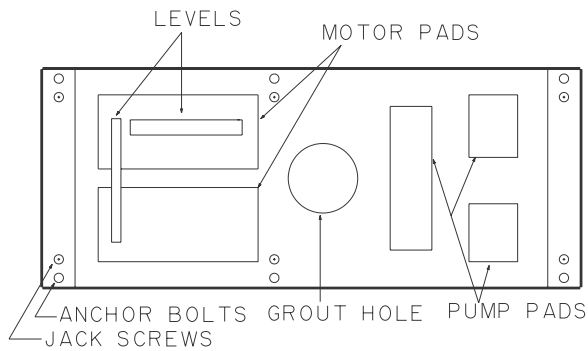

Fig. 13

NOTE: When using a machinist level, it is important that the surface being leveled is free of all contaminants, such as dust, to ensure an accurate reading.

5. Level the motor pads as close to zero as possible, in both directions, by adjusting the four jack screws.
6. Next, turn down the center jack screws so that they are resting on their metal discs on the foundation.
7. Place the two levels on the pump pads, one lengthwise on a single pump pad, and another across the middle of both pump pads (Fig. 14).

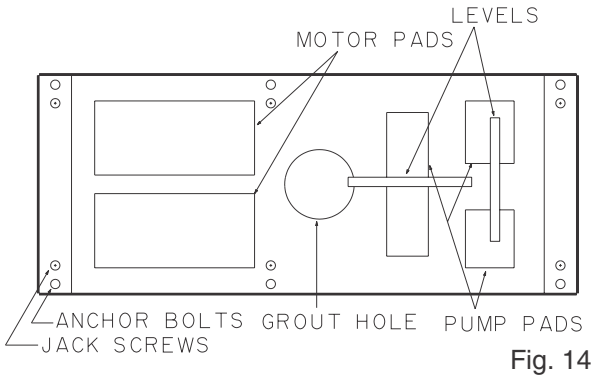

Fig. 14

8. Level the pump pads as close to zero as possible, in both directions, by adjusting the jack screws.
9. Install the anchor bolts until they are hand tight.
10. Return the levels to the motor pads and check the level measurements.
11. Adjust the jack screws and anchor bolts, if necessary, until all level measurements are within the design requirements of 0.002 in./ft.
12. When taking readings, center the level over the pad being measured.

NOTE: The Baseplate Leveling Worksheet provided may be used when taking readings.

Stilt Mounted

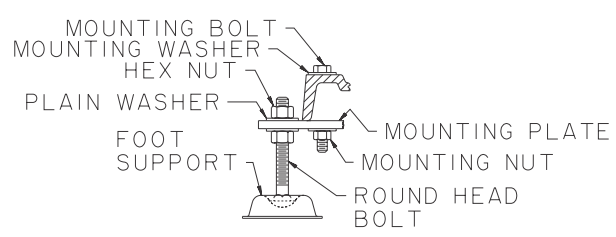

Fig. 15

1. Raise or support the baseplate above the foundation or floor.
2. Determine the desired baseplate height above the floor, referenced to the stilt mounting flange.

3. Set the bottom adjusting nuts and jamnuts on each stilt to the desired height.

4. Insert a washer between the bottom adjusting nut and the baseplate.

5. Install each stilt, holding it in place with another washer and the top adjusting nut. Finish by installing the top jam nut.

6. Once all four stilts have been installed, lower the unit making sure each stilt bolt head settles into its floor cup.

7. Level the baseplate while making final height adjustments. Adjust the baseplate height by loosening the top jam nut and adjusting nut. Change the height by moving the lower adjusting nut. When the baseplate is level, tighten the top adjusting nuts and then snug the lower and upper jam nuts.

NOTE: Suction and discharge piping must be individually supported. The stilt mounted baseplate is not designed to support any static pipe loads.

Spring Mounted

1. Raise or support the baseplate above the foundation or floor. Be sure to allow enough room under the baseplate to install the spring assemblies.

2. Set the bottom adjusting nuts on each spring stud to the desired height.

3. Insert a washer between the bottom adjusting nut and the spring follower. Install a spring and another follower. Install this subassembly from the bottom of the baseplate.

4. Install the upper half of the spring assembly consisting of a follower, a spring, another follower, and a flat washer. Now install the top adjusting nut and jam nut. Tighten finger tight.

5. Repeat steps 1 thru 4 for all the spring assemblies.

6. Once all the springs have been installed, lower the unit on to the foundation pads.

NOTE: The foundation pads are supplied by the customer. They are to be 16-20 micro-inch surface finish 316 stainless steel plate.

7. Level the baseplate while making final height adjustments. Adjust the baseplate height by loosening the top jam nut and adjusting nut. Change the height by moving the lower adjusting nut. When the baseplate is level, tighten the top adjusting nuts just enough to make sure the top springs are not loose in their followers and then snug the lower and upper jam nuts.

NOTE: Suction and discharge piping must be individually supported. The spring mounted baseplates are designed to support piping loads developed by thermal expansion only.

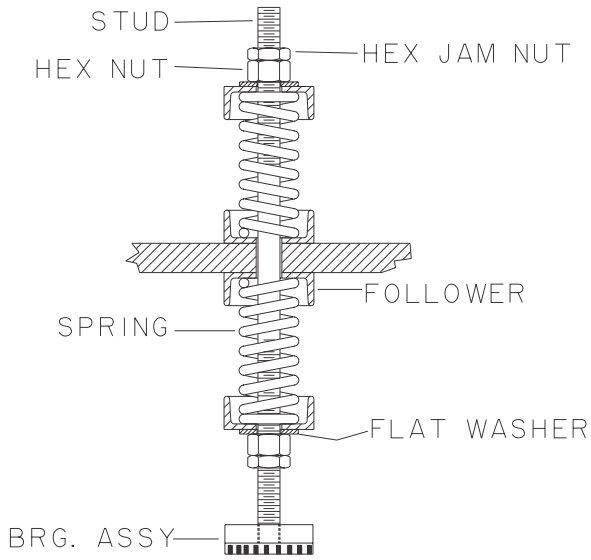

Fig. 16

Polyshield® ANSI Combo

Installation, Operation, and Maintenance Instructions

Safety Considerations

Several important general precautions are listed below:

1. Do not remove the Polyshield® ANSI Combo from its shipping pallet until you are ready to hoist it onto its location.
2. Do not subject the Polyshield® ANSI or Custom Combo to rough handling or unnecessary mechanical shock.
3. Do not attempt to lift the Polyshield® ANSI Combo by any means other than that which is prescribed in these procedures.
4. Do not use hammer blows or other impact loading to adjust the positioning of the Polyshield® ANSI Combo. Do not pry against the Polyshield® mounting block when moving the motor during shaft alignment.
5. Do not attempt to transport, handle, or install a Polyshield® ANSI Combo when ambient temperature is below -50° F (-45° C).
6. Do not operate a pump installed on a Polyshield® ANSI Combo at process fluid temperatures in excess of 300° F (150° C) with polymer mounting pads and 500° F with alloy mounting pads unless prior approval from ITT Industries is obtained in writing.

NOTE: Always coordinate installation activity with operations personnel, and follow all plant safety requirements and applicable safety and health laws, directives and regulations.

Overview

WARNING

CAUTION

Observance of proper handling procedures during installation is extremely important to prevent damage to the Polyshield® ANSI Combo. While polymer concrete possesses inherent high strength, subjecting it to impact or bending loads through rough handling or improper lifting or mounting may result in irreparable damage to the Polyshield® ANSI Combo as well as damage to the mounted equipment or injury to personnel.

Application

The polymer concrete material used in the manufacture of the Polyshield® ANSI Combo has been formulated for application in a wide range of corrosive fluid handling services. The material is not, however, universally corrosion resistant. A comprehensive corrosion guide is available. (Refer to Pricebook Page 766.7. It is strongly recommended that this bulletin be reviewed prior to specifying or installing a Polyshield® Product.

The Polyshield® ANSI Combo is also suitable for application in a wide range of fluid process temperatures, specifically, -50° F to 300° F (-45° C to 150° C). Depending on the configuration of the pump that is to be mounted on the Polyshield®, fluid process temperature in excess of 300° F (150° C) may be permissible. Contact your ITT Industries Goulds Pumps representative for assistance in determining acceptability of a specific application.

Storage

This section addresses the storage procedures for the Polyshield® ANSI Combo only. When storing Polyshield® ANSI Combos and pump assemblies, it is important that the proper storage procedures for the pump be observed as well. Refer to the Installation, Operation and Maintenance Instructions (IOM) for the particular Goulds pump that is mounted on your Polyshield® product.

Polyshield® normal packaging is designed to protect the Polyshield® ANSI Combo during shipment and handling from the time it is manufactured at the factory to installation at the end user's jobsite. If the Polyshield® Combo is to be stored for a period of time prior to installation, it is recommended that the following procedures be followed:

a. Leave the Polyshield® ANSI Combo strapped to its wooden shipping pallet.

b. Place the pallet on a solid, dry, level surface in a location where the ANSI Combo cannot be struck by passing fork trucks, falling objects, etc. Make sure the pallet does not rock.

c. Do not stack heavy objects on top of the Polyshield® ANSI Combo.

d. If the Polyshield® ANSI Combo is to be stored in an outdoor location, cover the Polyshield® completely with a tarpaulin or dark plastic sheeting to prevent UV degradation of the surface.

NOTE: UV degradation (bleaching) of the polymer concrete is the normal result of exposure to sunlight. This phenomenon is purely a visible change in the color of the material, which in no way compromises the performance or corrosion resistance characteristics of the Polyshield®.

WARNING

Do not attempt to stand a Polyshield® on its end to make more efficient use of storage space. Neither the Polyshield® Combo nor the strapping that holds the Polyshield® Combo to its wooden pallet have been designed for vertical storage. Severe personal injury or death, as well as irreparable damage to the Polyshield® Combo may result if the Combo tips over.

Lifting Polyshield® Combo Units and Polyshield® Combo / Pump Assemblies

CAUTION

Polyshield® units should be transported via fork truck to the area of their intended installation on the wooden pallets on which they were shipped. Never transport a Polyshield® unit over a long distance or over rough terrain while suspended from slings.

Only trained personnel should do lifting. Pumps and motors often have integral lifting eyes or eye bolts. These are intended for use in lifting the individual pieces of equipment. Do not use these features to lift a Polyshield® Combo / pump assembly.

Lifting

The following procedures are recommended for lifting Polyshield® ANSI Combo units:

Polyshield® with no mounted equipment:

WARNING

Do not install eyebolts in the Polyshield® thread inserts for the purpose of lifting the base. This practice imposes lateral loads on the inserts — which they were not designed to withstand.

Remove the metal shipping straps that hold the Polyshield® unit to the wooden pallet. Slip slings under each end of the Polyshield® unit as a harness (Fig. A).

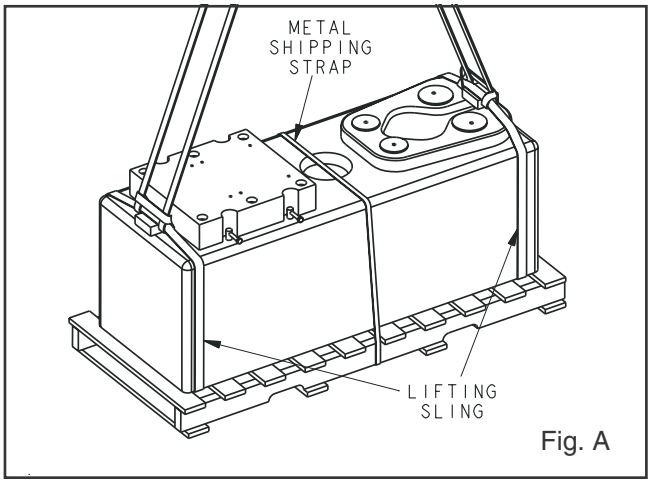

Fig. A

Lift the Polyshield® unit a few inches off the pallet and verify that it hangs reasonably level and that the slings are not prone to slipping out of position.

WARNING

Keep hands and feet out from under the Polyshield® unit during these steps. If slings slip and the unit tips over, severe personal injury or death may result, as well as irreparable damage to the Polyshield® Combo.

If the sling appears to be unstable, set the Polyshield® unit back on the pallet and reposition the slings.

After satisfactory slinging has been achieved, the Polyshield® unit may be hoisted onto its foundation. Take care not to bump the unit against fixed objects or induce any unnecessary shock loads. Lower the unit slowly over the foundation using care to center the unit over the rebar cage. Place shim packs or wedges under the Polyshield® unit at a minimum of eight total or (four [4] locations on each side) to allow for the removal of the slings. Twelve (12) total shim locations or (six [6] shim locations each side are required for Polyshield® units exceeding 6 feet in length.

Polyshield® with installed equipment:

Pump and motor installed:

Remove the metal shipping straps that hold the Polyshield® unit to the wooden pallet. Slip slings under each end of the Polyshield® unit. This procedure is recommended up to the MTX or LTX pump units. All motors up to a 364T NEMA frame may be installed while mounted. Motor frame sizes 365Tor larger should be removed during locating and installation of the Polyshield® ANSI Combo units. Check to see that the pump suction nozzle does not interfere with the lifting sling. If the pump creates interference, it should be removed. Lift the Polyshield® ANSI Combo a few inches off the pallet and verify that it hangs reasonably level and that the slings are not prone to slipping out of position.

After satisfactory slinging has been achieved, the Polyshield® ANSI Combo may be hoisted onto its foundation. Take care not to bump the unit against fixed objects or induce any unnecessary shock loads. Lower the unit slowly over the foundation using care to center the unit over the rebar cage. Place shim packs or wedges under the Polyshield® unit at a minimum of eight total (or four [4] locations on each side) to allow for the removal of the slings. Twelve (12) total shim locations (or six [6] shim locations each side) are required for Polyshield® units exceeding 6 feet in length.

Installation

General Description of the Polyshield® ANSI Combo

The Polyshield® ANSI Combo is a solid, polymer concrete foundation and baseplate shell that is manufactured in versions that conform to accommodate ASME/ANSI B73.1 pumps.

Polyshield® ANSI Combo units are manufactured in five primary sizes with integral catch basins and removable motor mounting blocks.

Metallic thread inserts are provided in the mounting surface for the particular combination of pump and motor that the Combo is intended. The metallic thread inserts on the pump end are available in 316SS (18.8 CrNi stainless steel), Alloy 20 (A744, CN-7M) and Hastelloy C 276 (A494, CW-6M). Multiple motor insert patterns are also available to accommodate more than one NEMA frame size. The standard thread insert material for the motor end is 316SS (18.8 CrNi stainless steel).

Optional alloy pads are available instead of metallic inserts for requirements that call for 0.002”/ft. and or process temperatures between 301° F and 500° F.

Polyadjust Motor Block Adjuster System

The Polyshield® ANSI Combo utilizes as standard the unique Polyshield® Polyadjust motor mounting system (Fig. B). This system is comprised of a one-piece polymer concrete motor mounting block having surface flatness and parallelism equivalent to machine steel blocks. The Polyadjust motor mounting block system incorporates the Polyloc Transverse Jack Bolt system. The Polyloc system provides transverse

motor adjustment. The side-mounted adjusters allow for shaft alignment to critical tolerances with minimal disturbance of indicators. The adjusters make contact with a solid motor mounting block not the foot of the motor.

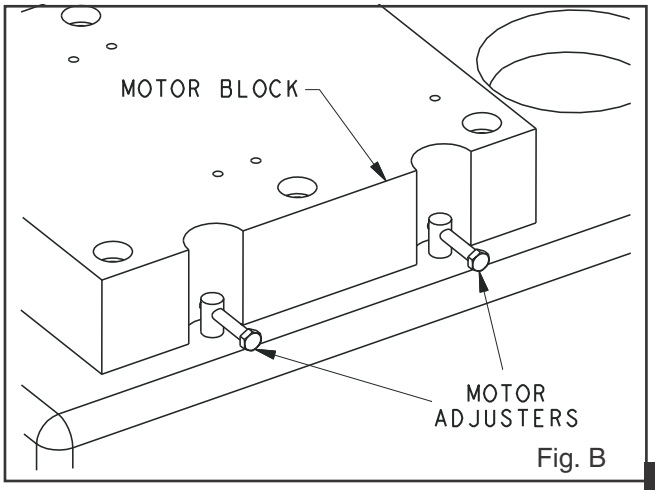

Fig. B

3

Polyshield® ANSI and Custom Combos Installation Procedures (NEW CONSTRUCTION)

1. Remove laitance and form grease and oil from area where the Polyshield® ANSI Combo will be located using mechanical means, abrasive blasting, or water blasting. Remove any loose debris including fins, aggregate, or any protruding objects around the perimeter of the area where the Polyshield ANSI Combo will rest.

2. Measure the outside dimensions of the Polyshield® ANSI Combo and subtract 8” from both the width and length to determine the rebar maximum dimension, thus providing clearance from the side of the walls of the ANSI Combo.

3. Drill holes in the existing slab a minimum of four inches deep for doweling in the vertical rebar rods allowing a minimum of one inch clearance from the top of the interior of the Polyshield® ANSI Combo. Space the rebar rods of 12” centers. Remove dust and debris from dowel holes and fill with epoxy adhesive for anchoring the rebar.

4. Allow the epoxy adhesive to cure, and then install horizontal rebar rods, tying in place with wire.

5. Place the Polyshield® ANSI Combo over the rebar cage, making adjustments for proper elevation, orientation relative to piping centerlines. A qualified millwright should field verify proper position of the pump mounting pads relative to the centerline of the suction piping. Appropriate shims may be placed along the bottom edge of the Polyshield® ANSI Combo to aid in leveling. Place shim packs or wedges under the Polyshield® unit at a minimum of eight total (or four [4] locations on each side) to allow for the removal of the slings and metal lifting straps from each end. A minimum of twelve (12) total shim locations (or six [6] shim locations each side) are recommended for Polyshield® units exceeding 7 feet in length.

6. Check and verify the dimensions again before the grouting procedure begins.

7. A low slump standard concrete mix is suitable for filling the Polyshield® ANSI Combo in new construction.

8. Seal around the outside bottom perimeter of the Polyshield® ANSI Combo with a fast setting hydraulic cement. Two brand name hydraulic cements are: ***Water Plug Hydraulic Cement*** and ***Dam-It Non Shrink Hydraulic Cement***

9. Pour the concrete mixture through the grout fill port on the top of the Polyshield® ANSI Combo using a concrete vibrator to ensure proper flow of the concrete. Do not over vibrate as excessive vibrating leads to larger aggregate settling which will result in a weak mix.

10. Pour the concrete to the bottom edge of the grout fill port.

11. Remove any loose debris from around edges of the grout fill port.

12. Seal grout fill port with grout port plug and Polyshield® Seal Kit provided.

13. Install pump, motor, and attach lines.

TOOLS FOR INSTALLATION

- Hammer drill with proper size bit
- Worm gear saw with diamond blade(if required)
- Rebar cutters (new installation)
- Concrete mixer
- Concrete vibrator
- Lifting device (for placing Polyshield® Foundation)
- Hand tools
- Chipping hammer
- Pressure washer or abrasive blast rig as required
- Epoxy adhesive (for setting rebar into concrete slab – new installation)
- Rebar tie wire
- Fast set cement

Polyshield® ANSI Combo Sealing Kit Epoxy Novolac (EN) Instructions

Each Kit contains:

- Polyshield® EN Resin
- Polyshield® EN Hardener
- Stir Sticks
- LATEX Gloves
- Instruction Sheet
- MSDS Material Safety Data Sheet

Application Instructions:

The Polyshield® EN Sealing Kit is intended for use in (1) bonding the plug into the grout hole at the top of the combo and (2) sealing and providing chemical resistance barrier around the perimeter of pump pad.

1. All surfaces to be bonded should be thoroughly cleaned and should be free of dust, oils and contaminants. Sand surfaces to be bonded prior to use.

2. Pour Polyshield® EN Hardener into the Polyshield® Resin can. Mix well with stir stick for about two minutes.

3. Apply to properly prepared surface by stir stick or putty knife.

4. Use MEK, Xylene solvents for cleaning tools and equipment and for lightly brushing surface to provide a smooth finish.

Safety Precautions

WARNING

Resin and hardener components may be irritating to the eyes and skin on contact. Vapors may cause irritation of eyes and respiratory tract. Area must be ventilated. Wear protective clothing including gloves. For details safety information, refer to the Material Safety Data Sheets of these products.

Polyshield® ANSI Combo Sealing Kit Vinyl Ester (VE) Instructions

Each Kit contains:

- Polyshield® VE Resin
- Polyshield® VE Hardeners #1
- Stir Sticks
- LATEX Gloves
- Instruction Sheet
- MSDS Material Safety Data Sheet

Application Instructions

The Polyshield® VE Sealing Kit is intended for use in (1) bonding the plug into the grout hole at the top of the combo and (2) sealing and providing chemical resistance barrier around the perimeter of pump pad.

1. All surfaces to be bonded should be thoroughly cleaned and should be free of dust, oils and contaminants. Sand surfaces to be bonded prior to use.
2. Pour Polyshield® VE Hardener #1 into the Polyshield® VE Resin can. Mix well with stir stick for about two minutes.
3. Apply to properly prepared surface by stir stick or putty knife.
4. Use MEK, Xylene solvents for cleaning tools and equipment and for lightly brushing surface to provide a smooth finish.

Safety Precautions

WARNING

Resin and hardener components may be irritating to the eyes and skin on contact. Vapors may cause irritation of eyes and respiratory tract. Area must be ventilated. Wear protective clothing including gloves. For details on safety information, refer to the Material Safety Data Sheets of these products.

***Polyshield*® is a registered trademark, U.S. Patent Nos. 5165651, et. al, apply.**

Shelf Life and Storage

Store resin and hardener in their unopened containers in a dry cool place away from open flames, heat or sources of ignition. Shelf life is limited to 60 days if stored in a cool, dry location.

Polyshield® Seal Kits provide sealant for every ANSI Combo. Polyshield® Seal Kits are shipped with each ANSI Combo.

Fastener Size and Recommended Torque Values

Fastener Standard	Fastener Nominal Size	Recommended Torque[1] lb.-ft.
SAE	5/16	6
	3/8	10
	7/16	18
	1/2	27
	5/8	53
	3/4	94
	7/8	152
	1	228

[1] Torque values shown for SAE fasteners are based on dry threads at 75% of proof load for ASTM307 Grades A and B (SAE Grade 1) fasteners.

For lubricated, plated, or PTFE coated threads, use 75% of torque values shown.

3

BASEPLATE LEVELING WORKSHEET

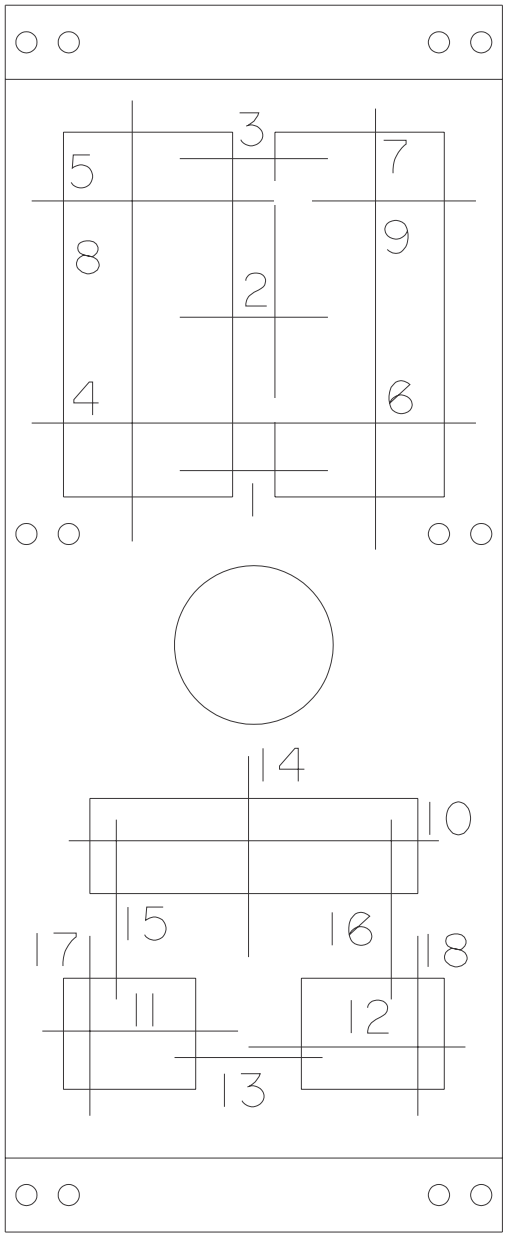

LEVEL MEASUREMENTS

1) _____
2) _____
3) _____
4) _____
5) _____
6) _____
7) _____
8) _____
9) _____
10) _____
11) _____
12) _____
13) _____
14) _____
15) _____
16) _____
17) _____
18) _____

ALIGNMENT

Alignment procedures must be followed to prevent unintended contact of rotating parts. Follow coupling manufacturer's coupling installation and operation procedures.

WARNING

Before beginning any alignment procedure, make sure driver power is locked out. Failure to lock out driver power will result in serious physical injury.

To remove guard, refer to coupling guard assembly/ disassembly instructions.

The points at which alignment is checked and adjusted are:

- **Initial Alignment** is done prior to operation when the pump and the driver are at ambient temperature.
- **Final Alignment** is done after operation when the pump and driver are at operating temperature.

Alignment is achieved by adding or removing shims from under the feet of the driver and shifting equipment horizontally as needed.

NOTE: Proper alignment is the responsibility of the installer and user of the unit.

Accurate alignment of the equipment must be attained. Trouble-free operation can be accomplished by following the procedures in *Appendix III*.

ALIGNMENT CHECKS

Initial Alignment (Cold Alignment)

- *Before Grouting Baseplate* - To ensure alignment can be obtained.
- *After Grouting Baseplate* - To ensure no changes have occurred during grouting process.
- *After Connecting Piping* - To ensure pipe strains haven't altered alignment. If changes have occurred, alter piping to remove pipe strains on pump flanges.

Final Alignment (Hot Alignment)

- *After First Run* - To obtain correct alignment when both pump and driver are at operating temperature. Thereafter, alignment should be checked periodically in accordance with plant operating procedures.

NOTE: Alignment check must be made if process temperature changes, piping changes and or pump service is performed.

ALIGNMENT CRITERIA

Good alignment is achieved when the dial indicator readings as specified in the alignment procedure are:

- .002 in. (.05 mm) Total Indicated Reading (T.I.R.) or less when the pump and driver are at operating temperature (Final Alignment)
- .0005 in. per inch of dial indicator separation for the reverse dial indicator or laser method when the pump and driver are at operating temperature (Final Alignment).

NOTE: C-Face motor adapter installation insturctions and alignment criteria are detailed in Appendix V.

During the installation phase, however, it is necessary to set the parallel alignment in the vertical direction to a different criteria due to differences in expansion rates of the pump and driver. *Table 1* shows recommended preliminary (cold) settings for electric motor driven pumps based on different pumpage temperatures. Driver manufacturers should be consulted for recommended cold settings for other types of drivers (steam turbines, engines, etc.)

Table 1 Cold Setting of Parallel Vertical Alignment							
Pumpage Temperature	Set Driver Shaft, Inches (mm)						
	3196	CV 3196	HT 3196	LF 3196	NM 3196	3198	3796
50° F (10° C)	.002 (.05) low	.002 (.05) low	0.000	.002 (.05) low	.002 (.05) low	.002 (.05) low	.002 (.05) low
150° F F (65° C)	.001 (.03) high	.001(.03) high	0.000	.001(.03) high	.001(.03) high	.001(.03) high	.001(.03) high
250° F (120° C)	.005 (.12) high	.005 (.12) high	0.000	.005 (.12) high	.005 (.12) high	.005 (.12) high	.005 (.12) high
350° F (175° C)	.009 (.23) high	.009 (.23) high	0.000	.009 (.23) high	N/A	.009 (.23) high	.009 (.23) high
450° F (218° C)	.013 (.33) high	.013 (.33) high	0.000	.013 (.33) high	N/A	N/A	.013 (.33) high
550° F (228° C)	.017 (.43) high	.017 (.43) high	0.000	.017 (.43) high	N/A	N/A	.017 (.43) high
650° F (343° C)	.021 (.53) high	.021 (.53) high	0.000	.021 (.53) high	N/A	N/A	N/A
700° F (371° C)	.023 (.58) high	.023 (.58) high	0.000	.023 (.58) high	N/A	N/A	N/A

NOTE: For the HT 3196, the cold setting of parallel vertical is 0.0 for all pumpage temperatures due to centerline mounting.

ALIGNMENT TROUBLESHOOTING

Table 2		
Problem	Problem Cause	Remedy
Cannot obtain horizontal (Side-to-Side) alignment, angular or parallel	Driver feet bolt bound.	Loosen pump hold down bolts and slide pump and driver until horizontal alignment is achieved.
	Baseplate not leveled properly, probably twisted.	Determine which corner(s) of the baseplate are high or low and remove or add shims at the appropriate corner(s) and realign.

GROUT BASEPLATE

1. Clean areas of baseplate that will contact grout. Do not use oil-based cleaners because grout will not bond to it. Refer to grout manufacturer's instructions.
2. Build dam around foundation. Thoroughly wet foundation (Fig. 17).

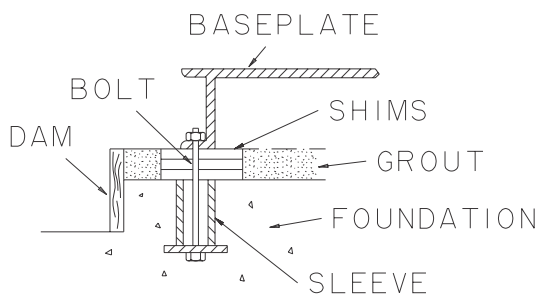

Fig. 17

3. Pour grout through grout hole in baseplate, up to level of dam. Remove air bubbles from grout as it is poured by puddling, using a vibrator, or pumping the grout into place. Non-shrink grout is recommended.
4. Allow grout to set.
5. Fill remainder of baseplate with grout. Remove air as before (Fig. 18).

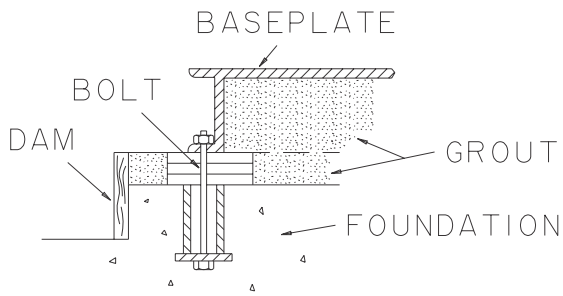

Fig. 18

6. Allow grout to set at least 48 hours.
7. Tighten foundation bolts.

ALIGNMENT CHECK

Re-check alignment before continuing, using methods previously described.

PIPING

GENERAL

Guidelines for piping are given in the "Hydraulic Institute Standards" available from: Hydraulic Institute, 9 Sylvan Way, Parsippany, NJ 07054-3802 and must be reviewed prior to pump installation.

WARNING

Never draw piping into place by forcing at the flanged connections of the pump. This may impose dangerous strains on the unit and cause misalignment between pump and driver. Pipe strain will adversely effect the operation of the pump resulting in physical injury and damage to the equipment.

1. All piping must be supported independently of, and line up naturally with, the pump flanges.
2. Piping runs should be as short as possible to minimize friction losses.
3. **DO NOT** connect piping to pump until grout has hardened and pump and driver hold-down bolts have been tightened.

4. It is suggested that expansion loops or joints, if used, be properly installed in suction and/or discharge lines when handling liquids at elevated temperatures, so linear expansion of piping will not draw pump out of alignment (Fig. 19 & 20).

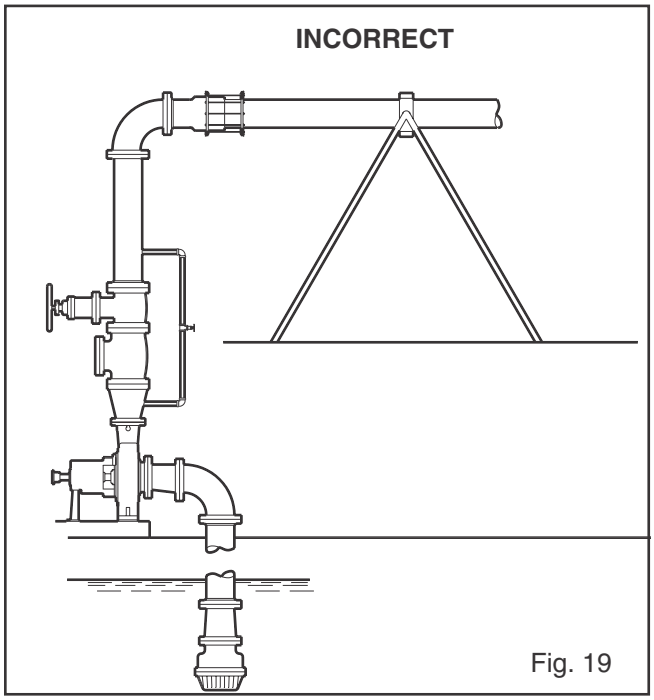

Fig. 19

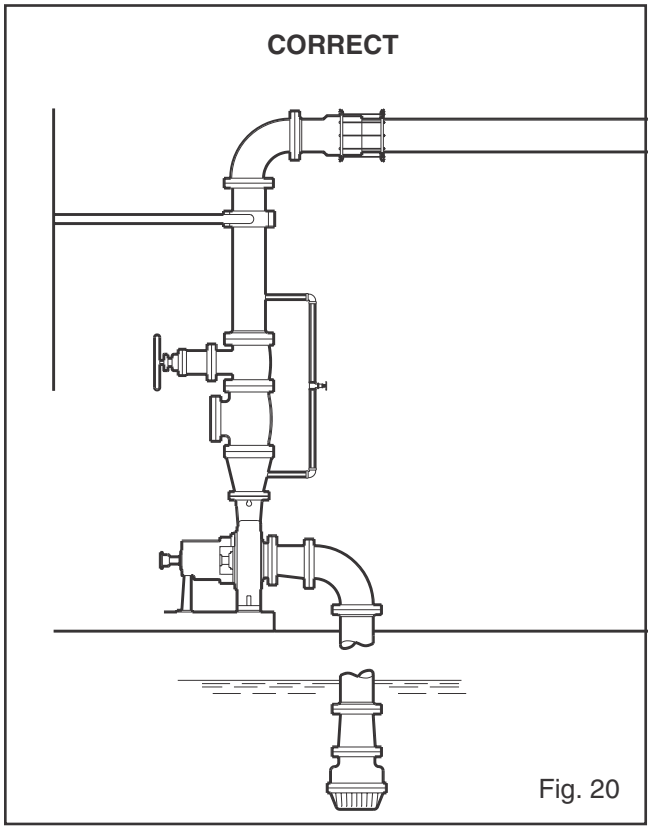

Fig. 20

5. The piping should be arranged to allow pump flushing prior to removal of the unit on services handling corrosive liquids.

6. Carefully clean all pipe parts, valves and fittings, and pump branches prior to assembly.

SUCTION PIPING

WARNING

$NPSH_A$ must always exceed $NPSH_R$ as shown on Goulds performance curves received with order. Reference Hydraulic Institute for NPSH and pipe friction values needed to evaluate suction piping.

Properly installed suction piping is a necessity for trouble-free pump operation. Suction piping should be flushed **BEFORE** connection to the pump.

1. Use of elbows close to the pump suction flange should be avoided. There should be a minimum of two pipe diameters of straight pipe between the elbow and suction inlet. Where used, elbows should be long radius (Fig. 21).

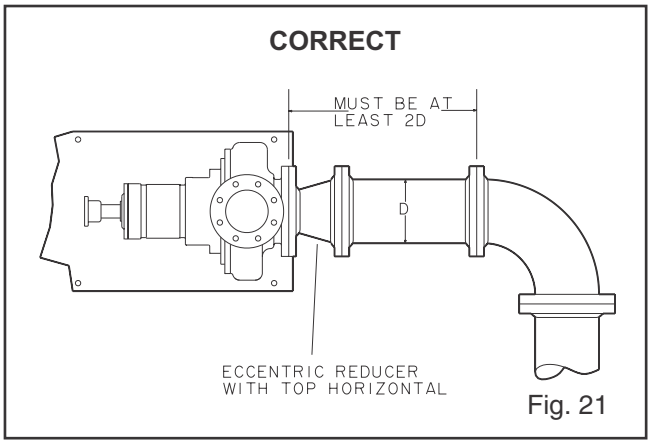

Fig. 21

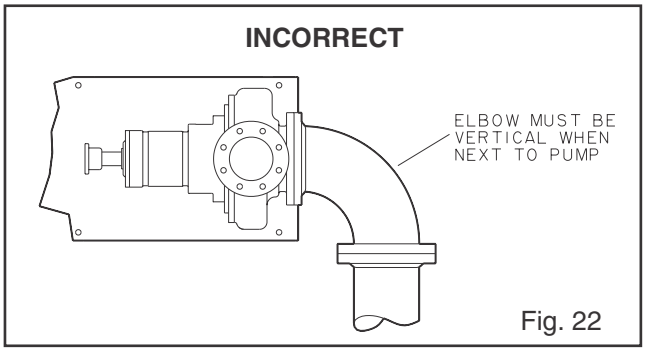

Fig. 22

2. Use suction pipe one or two sizes larger than the pump suction, with a reducer at the suction flange. **Suction piping should never be of smaller diameter than the pump suction.**

3. Reducers should be eccentric at the pump suction flange with sloping side down and horizontal side at the top (Figs. 23, 24, 25).

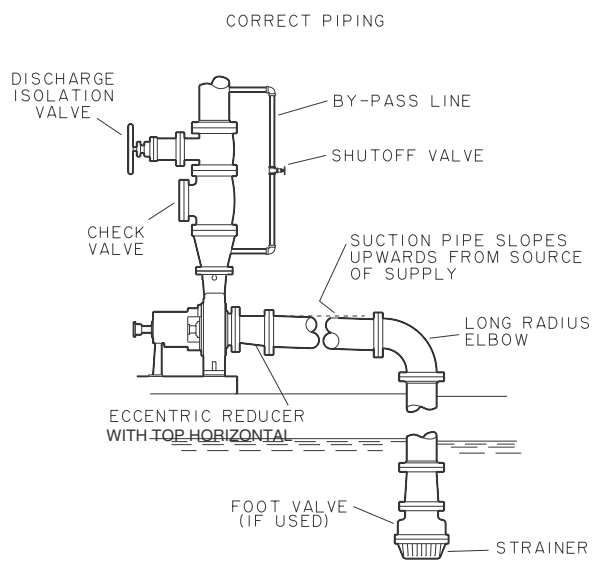

Fig. 23

CAUTION

Pump must never be throttled on suction side.

4. Suction strainers, when used, must have a net "free area" of at least three times the suction pipe area.

5. Separate suction lines are recommended when more than one pump is operating from the same source of supply.

Suction Lift Conditions

1. Suction pipe must be free from air pockets.

2. Suction piping must slope upwards to pump.

3. All joints must be air tight.

4. A means of priming the pump must be provided, such as a foot valve, except for the 3796 self priming pump.

Suction Head / Flooded Suction Conditions

1. An isolation valve should be installed in the suction line at least two pipe diameters from the suction to permit closing of the line for pump inspection and maintenance.

2. Keep suction pipe free from air pockets.

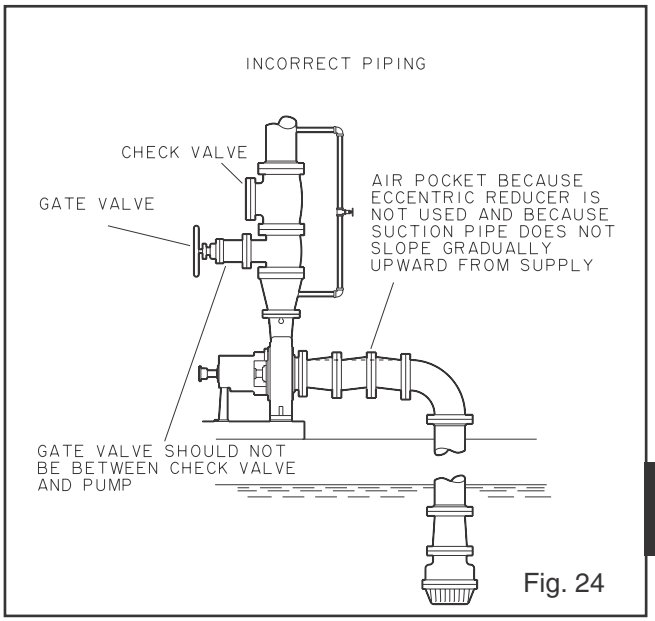

Fig. 24

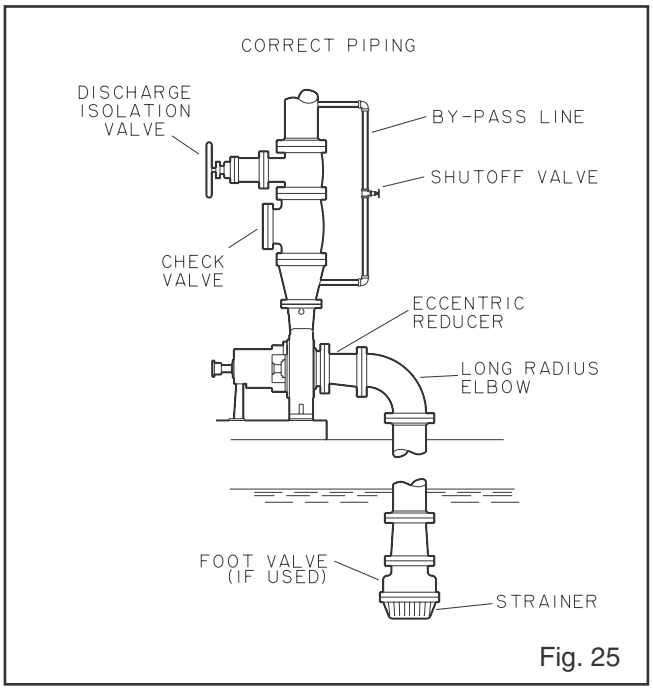

Fig. 25

3. Piping should be level or slope gradually downward from the source of supply.

4. No portion of the piping should extend below pump suction flange.

5. The size of entrance from supply should be one or two sizes larger than the suction pipe.

6. The suction pipe must be adequately submerged below the liquid surface to prevent vortices and air entrainment at the supply.

DISCHARGE PIPING

1. Isolation and check valves should be installed in discharge line. Locate the check valve between isolation valve and pump, this will permit inspection of the check valve. The isolation valve is required for priming, regulation of flow, and for inspection and maintenance of pump. The check valve prevents pump or seal damage due to reverse flow through the pump when the driver is turned off.
2. Increasers, if used, should be placed between pump and check valves.
3. Cushioning devices should be used to protect the pump from surges and water hammer if quick-closing valves are installed in system.

FINAL PIPING CHECK

After connecting the piping to pump:

1. Rotate shaft several times by hand to be sure that there is no binding and all parts are free.
2. Check alignment, per the alignment procedure outlined previously to determine absence of pipe strain. If pipe strain exists, correct piping.

OPERATION

PREPARATION FOR START-UP 35
Checking Rotation. 35
Check Impeller Clearance. 35
Couple Pump and Driver 36
Lubricating Bearings 37
Shaft Sealing 37
Priming Pump 40
STARTING PUMP 42
OPERATION 42
General Considerations 42
Operating at Reduced Capacity. 42
Operating Under Freezing Conditions. 42
SHUTDOWN 43
FINAL ALIGNMENT 43

PREPARATION FOR START-UP

When installing in a potentially explosive environment, please ensure that the motor is properly certified.

CHECKING ROTATION

CAUTION

Serious damage may result if pump is run in the wrong rotation.

1. Lock out power to driver.

WARNING

Lock out driver power to prevent accidental start-up and physical injury.

2. Make sure coupling hubs are securely fastened to the shafts and the coupling spacer has been removed.

NOTE: Pump is shipped with coupling spacer removed.

3. Unlock driver power.
4. Make sure everyone is clear. Jog driver just long enough to determine direction of rotation. Rotation must correspond to arrow on bearing housing.
5. Lock out power to driver.

The impeller clearance setting procedure must be followed. Improperly setting the clearance or not following any of the proper procedures can result in sparks, unexpected heat generation and equipment damage.

CHECK IMPELLER CLEARANCE

Prior to operating the pump, impeller clearances must be checked. This check will help ensure that the pump turns freely and that it operates at optimal efficiency for good equipment life and low energy consumption. See *Section 4, Table 3* for details.

The maximum impeller setting should not be set more than .005 inch (0.13mm) above values in *Table 3* or significant performance degradation will result.

Also, for pumpage temperatures above 200° F (93° C) the cold (ambient) setting must be increased per *Table 3*. This is necessary to prevent the impeller from contacting the casing due to differential expansion from the higher operating temperatures. See *Section 5, Preventive Maintenance,* for impeller adjustment procedure.

Service temperature in an ATEX classified environment is limited by Table 1 in the SAFETY section.

Table 3
Impeller Clearances

Cold Temperature Clearances for Various Service Temperatures, inches (mm)

Service Temperature	3196 and HT3196						LF3196	
	STX		MTX/LTX		XLTX/X17		STX MTX/LTX	
	inches	mm	inches	mm	inches	mm	inches	mm
-20 to 150°F (-29 to 66°C)	0.005	0.13	0.008	0.20	0.015	0.38	0.015	0.38
Up to 175°F (79°C)	0.005	0.13	0.008	0.20	0.015	0.38	0.015	0.38
Up to 200°F (93°C)	0.005	0.13	0.008	0.20	0.015	0.38	0.015	0.38
Up to 250°F (121°C)	0.006	0.16	0.009	0.23	0.016	0.41	0.016	0.41
Up to 300°F (149°C)	0.007	0.19	0.010	0.26	0.017	0.44	0.017	0.44
Up to 350°F (177°C)	0.009	0.22	0.012	0.29	0.019	0.47	0.019	0.47
Up to 400°F (204°C)	0.010	0.25	0.013	0.32	0.020	0.50	0.020	0.50
Up to 450°F (232°C)	0.011	0.28	0.014	0.35	0.021	0.53	0.021	0.53
Up to 500°F (260°C)	0.012	0.30	0.015	0.38	0.022	0.56	0.022	0.56
Up to 550°F (288°C)	0.013	0.33	0.016	0.41	0.023	0.59	0.023	0.59
Up to 600°F (316°C)	0.014	0.36	0.017	0.44	0.024	0.62	0.024	0.62
Up to 650°F (343°C)	0.016	0.39	0.019	0.47	0.026	0.65	0.026	0.65
Up to 700°F (371°C)	0.017	0.42	0.020	0.50	0.027	0.68	0.027	0.68

Table 3, cont'd
Impeller Clearances

Cold Temperature Clearances for Various Service Temperatures, inches (mm)

Service Temperature	CV 3196[1]		3796		NM 3196				3198	
	STX MTX/LTX XLTX		STX MTX/LTX		STX		MTX/LTX		STX MTX/LTX	
-20 to 150°F (-29 to 66°C)	0.06	1.52	0.015	0.38	0.005	0.13	0.008	0.20	0.015	0.38
Up to 175°F (79°C)	0.06	1.52	0.015	0.38	0.005	0.13	0.008	0.20	0.020	0.51
Up to 200°F (93°C)	0.06	1.52	0.015	0.38	0.005	0.13	0.008	0.20	0.024	0.61
Up to 250°F (121°C)	0.06	1.52	0.016	0.41					0.032	0.81
Up to 300°F (149°C)	0.06	1.52	0.017	0.44					0.040	1.02
Up to 350°F (177°C)	0.06	1.52	0.019	0.47						
Up to 400°F (204°C)	0.06	1.52	0.020	0.50						
Up to 450°F (232°C)			0.021	0.53						
Up to 500°F (260°C)			0.022	0.56						
Up to 550°F (288°C)										
Up to 600°F (316°C)										
Up to 650°F (343°C)										
Up to 700°F (371°C)										

COUPLE PUMP AND DRIVER

WARNING

Lock out driver power to prevent accidental rotation and physical injury.

The coupling used in an ATEX classified environment must be properly certified.

1. Install and lubricate coupling per manufacturer's instructions.
2. Install coupling guard (Fig. 26). Refer to Coupling Guard Installation and Disassembly Section *Appendix II*.

The coupling guard used in an ATEX classified environment must be constructed from a non-sparking material.

WARNING

Never operate a pump without coupling guard properly installed. Refer to Appendix II for coupling guard installation instructions. Personal injury will occur if pump is run without coupling guard.

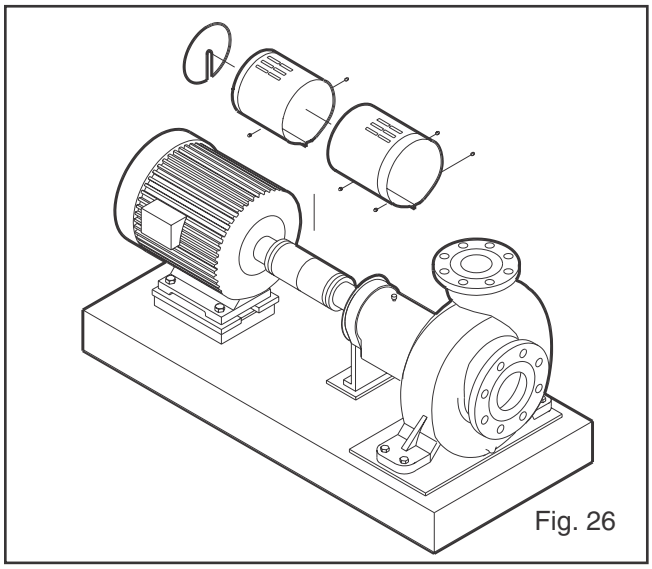

Fig. 26

LUBRICATING BEARINGS

Bearings must be lubricated properly in order to prevent excess heat generation, sparks and premature failure.

CAUTION

Pumps are shipped without oil.

Oil Lubrication: Fill bearing frame with oil, through filler connection (located on top of bearing frame refer to Fig. 34), until oil level reaches the middle of the sight-glass. A high quality turbine type oil with rust and oxidation inhibitors should be used. See *Table 5* for recommendations.

Pure Oil Mist Lubrication: Oil mist is an optional feature for the ANSI family pumps. Follow oil mist generator manufacturer's instructions. The inlet connections are located on the top of the bearing frame, connection points are covered under lubrication. (Refer to *Appendix I* on converting lubrication.)

Grease Lubrication: Pumps are shipped **with** grease. See *Table 6* for grease requirements.

Greased For Life Bearings: These bearings are filled with grease and sealed by the bearing manufacturer.

If the pump is put into operation after a prolonged shut down, flush out the bearings and bearing frame with a light oil to remove contaminants. During flushing, rotate the shaft slowly by hand. Finally, flush the bearing housing with proper lubricating oil to insure oil quality after cleaning.

See *Preventive Maintenance* section for lubrication recommendations.

CAUTION

Operation of the unit without proper lubrication will cause bearing failure, and pump seizure.

SHAFT SEALING

The mechanical seal used in an ATEX classified environment must be properly certified.

Cartridge Mechanical Seals:

1. Slide the cartridge seal onto the shaft or sleeve until it contacts the inboard labyrinth oil seal.
2. Assemble the seal chamber per the instructions in *Section 6 - Disassembly & Reassembly*.
3. Slide the cartridge seal into the seal chamber and secure using the four studs and nuts.
4. Continue the pump reassembly per the instructions in *Section 6 - Disassembly & Reassembly*.
5. Set the impeller clearance per the instructions in *Section 4 - Operation*.
6. Tighten the set screws in the seal locking ring to secure the seal to the shaft.
7. Remove the centering clips from the seal.

Conventional Inside Component Mechanical Seal:

1. Assemble the seal chamber per the instructions in *Section 6 - Disassembly & Reassembly*.
2. Apply bluing to the shaft/sleeve at the face of the seal chamber.
3. Continue the complete reassembly of the pump, less the mechanical seal.
4. Set the impeller clearance per the instructions in *Section 4 - Operation*.
5. Scribe a line on the blued shaft/sleeve at the face of the seal chamber.
6. Remove the casing, impeller, and seal chamber per the instructions in *Section 6 - Disassembly & Reassembly*.
7. Slide the gland (with the stationary seat and gland gasket installed) onto the shaft until it contacts the inboard labyrinth oil seal.
8. Install the mechanical seal rotary unit per the manufacturer's instructions using the scribed line and the seal reference dimension.

9. Reassemble the seal chamber per the instructions in *Section 6 - Disassembly & Reassembly*.

10. Slide the gland on the seal chamber studs and secure with the gland nuts. Be sure to tighten the nuts evenly such that the gland is seated on the seal chamber pilot and is perpendicular to the shaft.

11. Complete the reassembly of the pump per the instructions in *Section 6 - Dissassembly & Reassembly*.

Conventional Outside Component Mechanical Seal:

1. Assemble the seal chamber per the instructions in *Section 6 - Disassembly & Reassembly*.

2. Apply bluing to the shaft/sleeve at the face of the seal chamber.

3. Continue the complete reassembly of the pump, less the mechanical seal.

4. Set the impeller clearance per the instructions in *Section 4 - Operation*.

5. Scribe a line on the blued shaft/sleeve at the face of the seal chamber.

6. Remove the casing, impeller, and seal chamber per the instructions in *Section 6 - Disassembly & Reassembly*.

7. Install the mechanical seal rotary unit per the manufacturer's instructions using the scribed line and the seal reference dimension. Be sure to secure the rotary unit in place using the set screws in the locking ring.

8. Install the gland (with the stationary seat and gland gaskets installed) on the seal chamber.

9. Reassemble the seal chamber per the instructions in *Section 6 - Disassembly & Reassembly*.

10. Complete the reassembly of the pump per the instructions in *Section 6 - Disassembly & Reassembly.*

The mechanical seal must always be properly flushed. Failure to do so will result in excess heat generation and seal failure.

Connection of Sealing Liquid: For satisfactory operation, there must be a liquid film between seal faces to lubricate them. Refer to the seal manufacturer's drawing for the location of the taps. Some methods which may be used to flush/cool the seal are:

a. *Product Flushing* - In this arrangement, the pumpage is piped from the casing (and cooled in an external heat exchanger, when required) then injected into seal gland.

b. *External Flush* - A clean, cool compatible liquid is injected from an outside source directly into the seal gland. The flushing liquid must be at a pressure of 5-15 psi (0.35-1.01 kg/cm^2) greater than the seal chamber pressure. Injection rate should be ½-2 GPM (2-8 LPM).

c. Other methods may be used which make use of multiple gland connections and/or seal chamber connections. Refer to the documentation supplied with the pump, mechanical seal reference drawing, and piping diagrams.

Packed stuffing boxes are not allowed in an ATEX classified environment.

Packed Stuffing Box Option: Models 3196, CV 3196, HT 3196, LF 3196, and 3796 pumps are shipped without packing, lantern ring or split gland installed. These are included with the box of fittings shipped with the pump and must be installed before start-up.

Installation of Packing:

1. Carefully clean stuffing box bore.

2. Twist the packing just enough to get it around the shaft (Figs. 27, 28).

3. Insert packing, staggering the joints in each ring by 90°.

4. The stuffing box arrangement in order of installation is: 2 packing rings, lantern ring (two-piece), then 3 packing rings.

CAUTION

Follow instructions to ensure the lantern ring is located at the flushing connection (Fig. 29). Otherwise, no flush will be obtained.

5. Install the gland halves and evenly hand tighten the nuts.

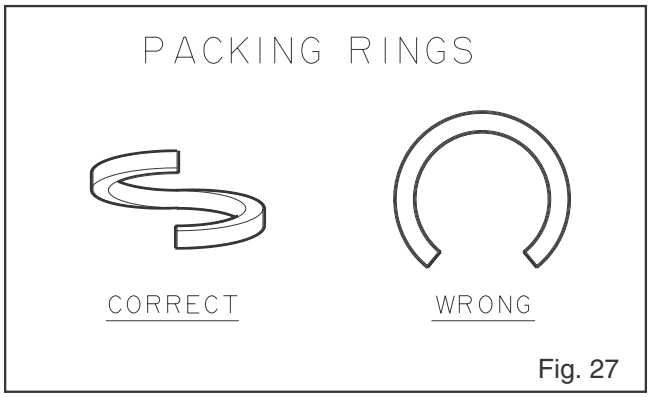

Fig. 27

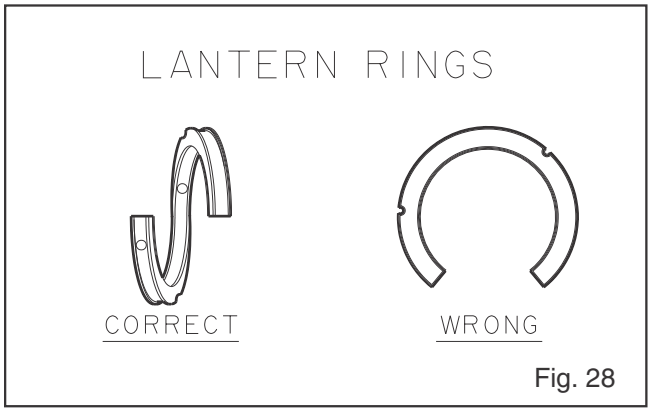

Fig. 28

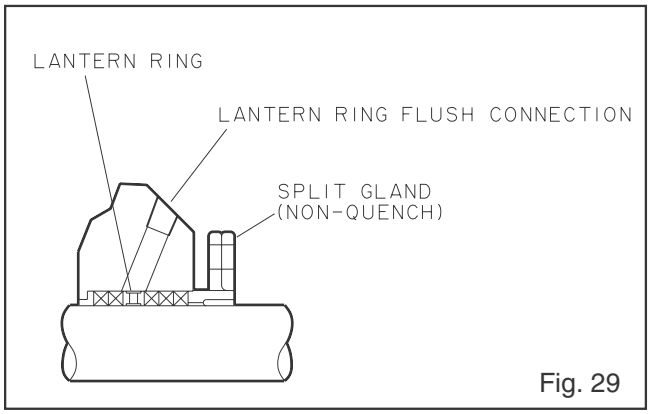

Fig. 29

Connection of Sealing Liquid: If the stuffing box pressure is above atmospheric pressure and the pumpage is clean, normal gland leakage of 40-60 drops per minute is usually sufficient to lubricate and cool the packing and sealing liquid is not required.

NOTE: Otherwise, a product flush can be used if a clean pumpage exists.

An external sealing liquid is required when:

1. Abrasive particles in the pumpage could score shaft sleeve.
2. Stuffing box pressure is below atmospheric pressure due to the pump running with a suction lift, or when the suction source is under a vacuum. Under these conditions, packing will not be cooled and lubricated and air will be drawn into pump.

If an outside source of clean compatible liquid is required, the pressure should be 15 psi (1.0 kg/cm^2) above the suction pressure. The piping should be connected to the lantern ring connection with a 40-60 drops-per-minute leak rate.

NOTE: Most packing requires lubrication. Failure to lubricate packing may shorten the life of the packing and pump.

Dynamic seals are not allowed in an ATEX classified environment.

Dynamic Seal Option: The 3196, CV 3196, and LF 3196 dynamic seal consists of two seals: a repeller that prevents leakage during pump operation and a secondary seal that prevents leakage when the unit is not operating. The repeller acts as a pump to prevent liquid from entering the stuffing box during pump operation. The repeller does not require a flush except for services which allow a build-up of solids on the repeller. A flush connection can be provided for this purpose. A drain connection can also be supplied to drain the repeller chamber if a danger of freezing exists.

Secondary Seals: The secondary seal prevents leakage during pump shut down. This seal is either graphite packing or an elastomeric face or lip seal.

1. **Graphite Packing** - This packing will provide adequate life running dry but will provide longer performance if it is lubricated with either clean water or grease. When clean water is used, remember that the repeller reduces both the quantity and pressure of seal water required. If the suction head is less than the repeller capability, the stuffing box pressure is the same as atmospheric. Seal water pressure must be high enough to overcome static head when the pump is not operating to keep pumpage out of the packing. Flow must be sufficient to cool the packing. If grease is used as the lubricant, spring-loaded grease lubricators should be used to maintain a constant supply.
2. **Elastomeric Face or Lip Seal** - The elastomeric face seal consists of an elastomer rotary fitted to the shaft, and a ceramic stationary seat fitted in the gland. To set the seal, remove the gland nuts and slide the gland back on the sleeve. Pull the

rotary back on the sleeve until it is about 1 inch beyond the stuffing box face. Push the gland back onto the studs, pushing the rotary back along the sleeve. Tighten the gland nuts. This ensures contact, no other adjustments are needed. The lip seal is pressed into the gland and no adjustment is required. Both seals are designed to run dry, so no flush is required.

NOTE: HT 3196, NM 3196, 3796, and 3198 are not available with dynamic seal options.

Pumps that are not self-priming must be fully primed at all times during operation. The only model line in this manual that is self-priming is the 3796.

PRIMING PUMP

(3196, CV 3196, HT3196, LF 3196, 3198, and NM 3196)

Never start the pump until it has been properly primed. Several different methods of priming can be used, depending upon type of installation and service involved.

Suction Supply Above Pump

1. Slowly open the suction valve (Fig. 30).
2. Open air vents on the suction and discharge piping until water flows out.
3. Close the vent valves.

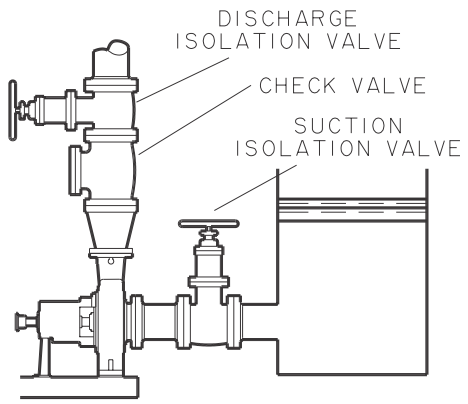

Fig. 30

Suction Supply Below Pump (except 3796)

A foot valve and outside source of liquid may be used to prime the pump. Outside source of liquid can come from a priming pump, pressurized discharge line, or other outside supply (Fig. 31 and 32).

NOTE: Model 3796 is a self-priming pump and does not require the use of a foot valve in the suction line. Refer to the pump's performance curve to determine the time required for priming.

1. Close discharge valve and open air vents in casing.
2. Open valve in outside supply line until only liquid escapes from vent valves.
3. Close the vent valves and then the outside supply line.

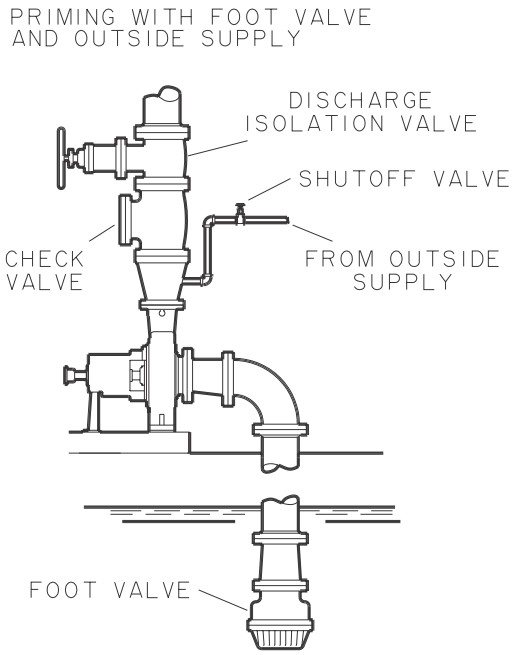

Fig. 31

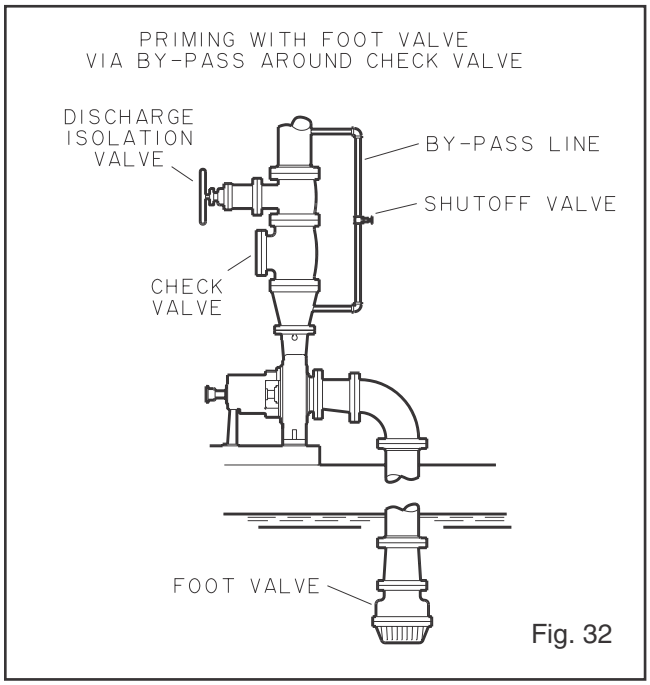

Fig. 32

Suction Supply Below Pump - 3796

NOTE: The 3796 is a self-priming pump and does not require manual priming prior to start-up (except for the initial charge). However, in a pressurized system, the pump requires an air vent or a permanent bypass line in the discharge piping to vent the evacuated air.

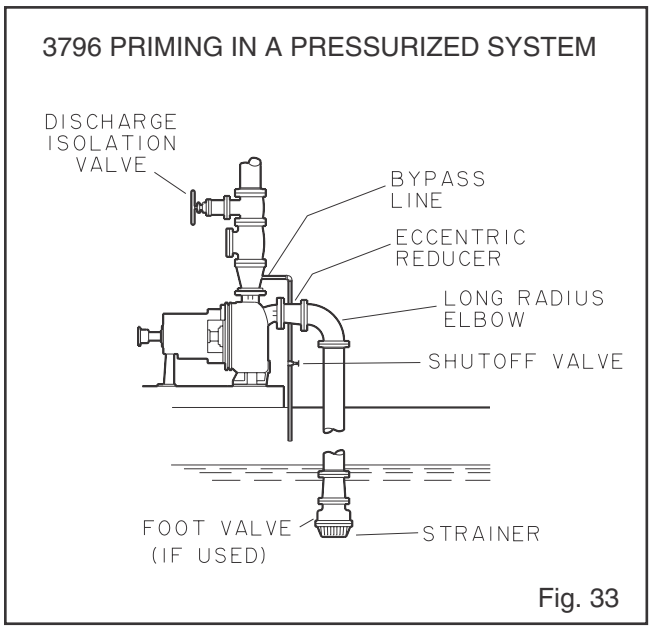

Fig. 33

Other Methods of Priming:

1. Priming by Ejector.
2. Priming by Automatic Priming Pump.

CAUTION

START-UP PRECAUTIONS

1. All equipment and personal safety related devices and controls must be installed and operating properly.
2. To prevent premature pump failure at initial start-up due to dirt or debris in the pipe system, ensure the system has been adequately cleaned and flushed.
3. Variable speed drivers should be brought to rated speed as quickly as possible.
4. Variable speed drivers should not be adjusted or checked for speed governor or overspeed trip settings while coupled to the pump at initial start-up. If settings have not been verified, uncouple the unit and refer to driver manufacturer's instructions for assistance.
5. Running a new or rebuilt pump at slow speeds may not provide enough flow to adequately flush and cool the stuffing box bushing's close running surfaces.
6. Pumpage temperatures in excess of 200° F (93° C) will require warm-up of pump prior to operation. Circulate a small amount of pumpage through the pump until the casing temperature is within 100° F (38° C) of the pumpage temperature and evenly heated.

NOTE: Warm-up rate should not exceed 1.4° C (2.5° F) per minute.

STARTING PUMP

1. Make sure suction valve and any recirculation or cooling lines are open.
2. Fully close or partially open discharge valve as dictated by system conditions.
3. Start Driver.

CAUTION

Immediately observe pressure gauges. If discharge pressure is not quickly attained - stop driver, reprime and attempt to restart.

4. Slowly open discharge valve until the desired flow is obtained.

CAUTION

Observe pump for vibration levels, bearing temperature and excessive noise. If normal levels are exceeded, shut down and resolve.

OPERATION

GENERAL CONSIDERATIONS

CAUTION

Always vary capacity with regulating valve in the discharge line. NEVER throttle flow from the suction side.

CAUTION

Driver may overload if the pumpage specific gravity (density) is greater than originally assumed, or the rated flow rate is exceeded.

CAUTION

Always operate the pump at or near the rated conditions to prevent damage resulting from cavitation or recirculation.

OPERATING AT REDUCED CAPACITY

WARNING

DO NOT operate pump below minimum rated flows or with suction and/or discharge valve closed. These conditions may create an explosive hazard due to vaporization of pumpage and can quickly lead to pump failure and physical injury.

CAUTION

Damage occurs from:

1. Increased vibration levels - Affects bearings, stuffing box or seal chamber, and mechanical seal.
2. Increased radial loads - Stresses on shaft and bearings.
3. Heat build up - Vaporization causing rotating parts to score or seize.
4. Cavitation - Damage to internal surfaces of pump.

OPERATING UNDER FREEZING CONDITIONS

Exposure to freezing conditions, while pump is idle, could cause liquid to freeze and damage the pump. Liquid inside pump should be drained. Liquid inside cooling coils, if supplied, should also be drained.

SHUTDOWN

1. Slowly close discharge valve.
2. Shut down and lock driver to prevent accidental rotation.

WARNING

When handling hazardous and/or toxic fluids, proper personal protective equipment should be worn. If pump is being drained, precautions must be taken to prevent physical injury. Pumpage must be handled and disposed of in conformance with applicable environmental regulations.

FINAL ALIGNMENT

Alignment procedures must be followed to prevent unintended contact of rotating parts. Follow coupling manufacturer's coupling installation and operation procedures.

1. Run the unit under actual operating conditions for a sufficient length of time to bring the pump and driver and associated system up to operating temperature.
2. Remove coupling guard. Refer to coupling guard installation and disassembly instructions in *Appendix II*.
3. Check alignment while unit is still hot per alignment procedure in the *Installation* Section.
4. Reinstall coupling guard. Refer to coupling guard instruction in *Appendix II*.

PREVENTIVE MAINTENANCE

GENERAL COMMENTS 45
MAINTENANCE SCHEDULE 45
MAINTENANCE OF BEARINGS 46
Oil Lubricated Bearings. 46
Grease Lubricated Bearings 47
MAINTENANCE OF SHAFT SEALS 48
Mechanical Seals. 48
Packed Stuffing Box 48
Dynamic Seal. 48
IMPELLER CLEARANCE SETTING 49
Dial Indicator Method. 49
Feeler Gauge Method 50
TROUBLESHOOTING. 52

GENERAL COMMENTS

A routine maintenance program can extend the life of your pump. Well maintained equipment will last longer and require fewer repairs. You should keep maintenance records, this will help pinpoint potential causes of problems.

The preventive maintenance section must be adhered to in order to keep the applicable ATEX classification of the equipment. Failure to follow these procedures will void the ATEX classification for the equipment.

MAINTENANCE SCHEDULE

ROUTINE MAINTENANCE

- Bearing lubrication
- Seal monitoring
- Vibration analysis
- Discharge pressure
- Temperature monitoring

ROUTINE INSPECTIONS

- Check level and condition of oil through sight glass on bearing frame.
- Check for unusual noise, vibration and bearing temperatures.
- Inspect pump and piping for leaks.
- Check seal chamber/stuffing box leakage.
  - Mechanical Seal: Should be no leakage.
  - Packing: Excessive leakage requires adjustment or possible packing replacement. Refer to *Section 4 - Operation* for packing gland adjustment.

3 MONTH INSPECTIONS

- Check the foundation and the hold-down bolts for tightness.
- If the pump has been left idle, check the packing. Replace if required.
- Oil should be changed at least every 3 months (2000 hours) or more often if there are any adverse atmospheric conditions or other conditions which might contaminate or break down the oil. If it is cloudy or contaminated as seen by inspection through the sight glass, it should be changed immediately.

- Check the shaft alignment. Realign if required.

ANNUAL INSPECTIONS

- Check the pump capacity, pressure and power. If pump performance does not satisfy your process requirements, and the process requirements have not changed, the pump should be disassembled, inspected, and worn parts should be replaced. Otherwise, a system inspection should be done.

INSPECTION INTERVALS

Inspection intervals should be shortened appropriately if the pumpage is abrasive and/or corrosive,

or if the environment is classified as potentially explosive.

MAINTENANCE OF BEARINGS

Throughout this section on bearing lubri--cation, different pumpage temperatures are listed. If the equipment is ATEX certified and the listed temperature exceeds the applicable value shown in Table 1 under SAFETY, then that temperature is not valid. When this situation occurs please consult with your ITT/Goulds representative.

OIL LUBRICATED BEARINGS

WARNING

Pumps are shipped without oil. Oil lubricated bearings must be lubricated at the job site.

Remove fill plug (113A) and add oil until level is at the center of the sight glass (319). Replace fill plug (Fig. 34) (See Table 4).

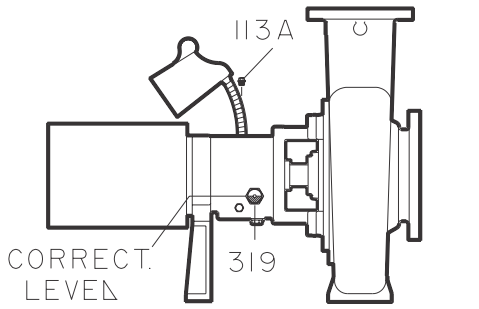

OIL LUBRICATED BEARINGS

Fig. 34

Change the oil after 200 hours for new bearings, thereafter every 2000 operating hours or 3 months (whichever comes first).

Table 4
Oil Volumes

Frame	Qts.	Oz.	ml
STX	0.5	16	400
MTX	1.3	42	1250
LTX	1.5	48	1400
XLT-X and X17	3	96	3000

A high quality turbine oil with rust and oxidation inhibitors should be used. For the majority of operational conditions, bearing temperatures will run between 120°F (50°C) and 180°F (82°C). In this range, an oil of ISO viscosity grade 68 at 100°F (40°C) is recommended. If bearing temperatures exceed 180°F (82°C), use ISO viscosity grade 100 with Bearing Frame cooling or Finned Tube oil cooler. The Finned Tube oil cooler is standard with the model HT 3196 and optional for all other models (See *Table 5)*. For higher operating temperatures, pumpage above 350°F (177°C), synthetic lubrication is recommended.

Table 5 Lubricating Oil Requirements		
	Pumpage temperature below 350°F (177°C)	Pumpage temperature above 350°F (177°C)
ISO Grade	VG 68	VG 100
Approx. SSU at 100°F (38°C)	300	470
DIN 51517	C68	C100
Kinem. viscosity at 100°F (40°C) mm^2/sec	68	100

Some acceptable lubricants are:

Chevron	GTS Oil 68
Exxon	Teresstic 68 or NUTO H68
Mobil	Mobil DTE 26 300 SSU @ 100°F (38°C)
Philips	Mangus Oil 315
Shell	Tellus Oil 68
Sunoco	Sunvis 968
Royal Purple	SYNFILM ISO VG 68 Synthetic Lube

GREASE LUBRICATED BEARINGS

Grease lubricated bearings are pre-lubricated at the factory. Most pumps have Sunoco 2EP grease. High temperature units (pumpage temperature greater than 350° F) use Mobil SCH32. Regrease bearings every 2000 operating hours or 3 months.

Regrease Procedure:

NOTE: When regreasing, there is danger of impurities entering the bearing housing. The grease container, the greasing device, and fittings must be clean.

1. Wipe dirt from grease fittings.
2. Remove 2 grease relief plugs (113) from bottom of frame.
3. Fill both grease cavities through fittings with recommended grease until fresh grease comes out of the relief holes. Reinstall grease relief plugs (113).
4. Ensure frame seals are seated in bearing housing and, if not, press in place with drains located at the bottom.

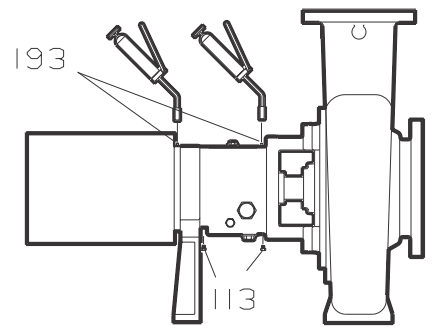

GREASE LUBRICATED BEARINGS

Fig. 35

NOTE: The bearing temperature usually rises after regreasing due to an excess supply of grease. Temperatures will return to normal after pump has run and purged the excess from the bearings, usually two to four hours.

For most operating conditions a lithium based mineral oil grease of NLGI consistency No. 2 is recommended. This grease is acceptable for bearing temperatures of 5°F to 230°F (-15°C to 110°C). Bearing temperatures are generally about 20°F (18°C) higher than bearing housing outer surface temperature.

Table 6 Lubricating Grease Requirements		
	Pumpage temperature below 350°F (177°C)	Pumpage temperature above 350°F (177°C)
NGLI consistency	2	3
Mobil	Mobilux EP2	SCH32
Exxon	Unirex N2	Unirex N3
Sunoco	Mutipurpose 2EP	
SKF	LGMT 2	LGMT 3

! CAUTION

Never mix greases of different consistency (NGLI 1 or 3 with NGLI 2) or different thickener. For example never mix a lithium base grease with a polyurea base grease.

Pumpage temperatures above 350°F (177°C) should be lubricated by a high temperature grease. Mineral oil greases should have oxidation stabilizers and a consistency of NGLI 3.

NOTE: If it is necessary to change grease type or consistency, the bearings must be removed and the old grease removed.

MAINTENANCE OF SHAFT SEALS

The mechanical seal used in an ATEX classified environment must be properly certified.

MECHANICAL SEALS

When mechanical seals are furnished, a manufacturer's reference drawing is supplied with the data package. This drawing should be kept for future use when performing maintenance and adjusting the seal. The seal drawing will also specify required flush liquid and attachment points. The seal and all flush piping must be checked and installed as needed prior to starting the pump.

The life of a mechanical seal depends on various factors such as cleanliness of the liquid handled and its lubricating properties. Due to the diversity of operating conditions it is, however, not possible to give definite indications as to its life.

WARNING

Never operate the pump without liquid supplied to mechanical seal. Running a mechanical seal dry, even for a few seconds, can cause seal damage and must be avoided. Physical injury can occur if mechanical seal fails.

PACKED STUFFING BOX

(3196, CV 3196, HT 3196, LF 3196, 3796)

Packed stuffing boxes are not allowed in an ATEX classified environment.

Packing operation can be inspected without shutting down or disassembling the pump. During normal operation the packing should leak approximately one drop per minute. If the drip rate is higher or lower than one drop per minute then an adjustment of the gland may be required. To slow down the leakage rate, the two gland bolts should be tightened evenly one-quarter (¼) turn each until the desired leakage rate is obtained. NEVER over-tighten packing to the point where less than one drop per minute is observed. Overtightening can cause excessive wear and power consumption during operation. If the packing cannot be tightened to obtain less than two drops per minute, then the packing may need to be replaced and the packing installation procedures under ***Operation*** should be followed.

CAUTION

Never attempt to replace packing until the driver is properly locked out and the coupling spacer is removed.

DYNAMIC SEAL (3196, CV 3196, LF 3196)

Dynamic seals are not allowed in an ATEX classified environment.

Dynamic Seal Components

Repeller - The dynamic repeller effectively prevents leakage of pumpage through the stuffing box when the pump is *operating* under published acceptable conditions. Dynamic seal parts do not wear substantially to affect operation unless the service is particularly abrasive or corrosive. Refer to *Disassembly and Reassembly* Section for maintenance, disassembly, and repair.

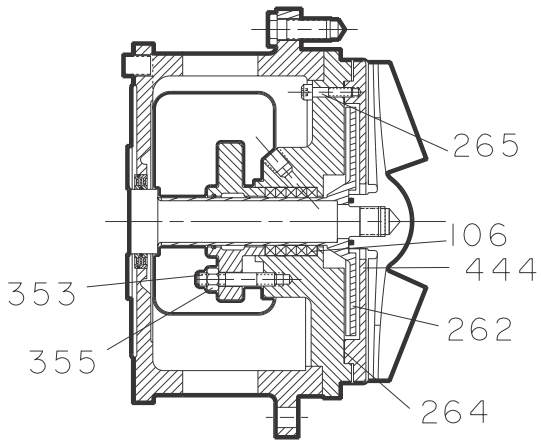

Dynamic Seal with Packing Fig. 36

Static Seal - A static seal is used to prevent leakage when the pump is *shut down*. This is either a lip seal, elastomeric face seal, or graphite packing. The lip and elastomeric face seal require no maintenance other than replacement when leakage becomes excessive. The packing should be installed as stuffing box packing. It is a special type designed to run dry, so it does not require an external flush.

NOTE: HT 3196, NM 3196, 3796, and 3198 are not available with dynamic seal option.

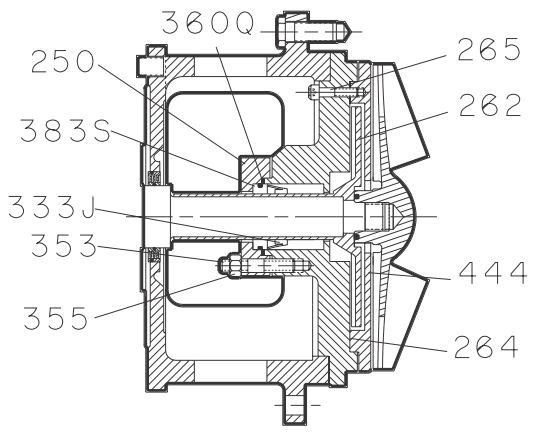

Dynamic Seal with Chekseal™ Fig. 37

IMPELLER CLEARANCE SETTING

The impeller clearance setting procedure must be followed. Improperly setting the clearance or not following any of the proper procedures can result in sparks, unexpected heat generation and equipment damage.

WARNING

Lock out driver power to prevent accidental startup and physical injury.

A change in pump performance may be noted over time by a drop in head or flow or an increase in power required. Performance can usually be renewed by adjusting the impeller clearance. Two techniques are given to set the impeller clearance, the dial indicator method and the feeler gauge method.

DIAL INDICATOR METHOD (all but CV)

1. Remove coupling guard. Refer to coupling guard instructions *Appendix II.*
2. Remove coupling.
3. Set indicator so that button contacts either the shaft end or against face of coupling (Fig. 38).
4. Loosen jam nuts (423) on jack bolts (370D) and back bolts out about two turns.
5. Tighten each locking bolt (370C) evenly, drawing the bearing housing (134A) towards the bearing frame (228) until impeller contacts the casing. Turn the shaft to ensure contact is made.

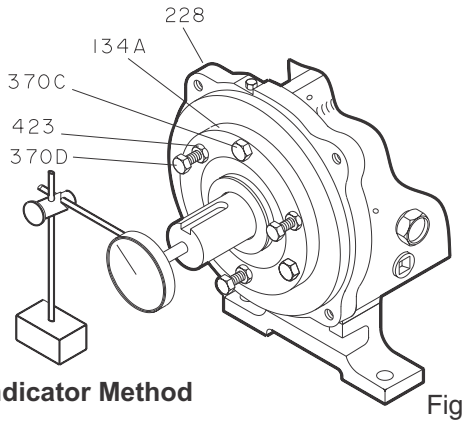

Dial Indicator Method Fig. 38

6. Set indicator to zero and back locking bolt (370C) out about one turn.
7. Thread jack bolts (370D) in until they evenly contact the bearing frame. Tighten the jack bolts evenly (about one flat at a time) backing the bearing housing (134A) away from the bearing frame until the indicator shows the proper clearance per *Table 3*.
8. Evenly tighten locking bolts (370C), then jack bolts (370D) keeping indicator reading at proper setting.
9. Check shaft for free turning.
10. Replace coupling guard.

DIAL INDICATOR METHOD (CV 3196)

1. Remove coupling guard. Refer to coupling guard instructions *Appendix II*.
2. Remove coupling.
3. Set indicator so that button contacts either the shaft end or against the face of coupling (Fig. 38).
4. Loosen each locking bolt (370C) several turns.
5. Loosen jam nuts (423) on jack bolts (370D) and turn bolts in several turns until impeller contacts the stuffing box cover or seal chamber. Turn shaft to ensure contact is made.
6. Set dial indicator at zero.
7. Back off the jacking bolts (370D) several turns and tighten the locking bolts (370C) to move the impeller away from the stuffing box cover or seal chamber until the dial indicator shows that a .060" clearance has been obtained.
8. Turn in the jacking bolts (370D) and tighten the jam nuts (423) evenly.
9. Check shaft for free turning.
10. Replace coupling.
11. Replace coupling guard.

FEELER GAUGE METHOD (all but CV)

1. Remove coupling guard. Refer to coupling guard instructions in *Appendix II.*
2. Loosen jam nuts (423) on jack bolts (371A) and back bolts out about two turns (Fig. 39).
3. Tighten locking bolts (370C) evenly, drawing bearing housing (134A) towards frame (228) until impeller contacts the casing. Turn shaft to ensure contact is made.
4. Using a feeler gauge, set the gap between the three locking bolts (370C) and bearing housing (134A) per impeller clearances in *Table 3.*
5. Evenly back out bearing housing (134A) using the three jack bolts (370D) until it contacts the locking bolts (370C). Evenly tighten jam nuts (423B).
6. Check shaft for free turning.
7. Replace coupling guard.

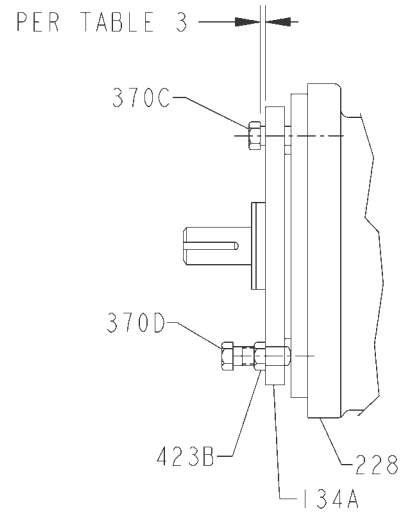

Fig. 39

FEELER GAUGE METHOD (CV)

1. Remove coupling guard. Refer to coupling guard instruction in *Appendix II*.
2. Remove coupling.
3. Loosen each locking bolt (370C) several turns.
4. Loosen jam nuts (423) on jack bolts and turn bolts in several turns until impeller contacts the stuffing box cover or seal chamber. Turn shaft to ensure contact is made.
5. Measure the gap between the bearing housing and the bearing frame with feeler gauges. Reduce this measurement by .060" and place the resultant feeler gauges between the bearing housing and the bearing frame as shown in Fig. 39.
6. Back off the jacking bolts (370D) several turns and tighten the locking bolts (370C) to move the impeller away from the stuffing box cover or seal chamber until the bearing housing snugs up the feeler gauges between the bearing housing and the bearing frame.
7. Turn in the jacking bolts (370D) and tighten the jam nuts (423) evenly.
8. Check shaft for free turning.
9. Replace coupling.
10. Replace coupling guard.

Table 3
Impeller Clearances

Cold Temperature Clearances for Various Service Temperatures, inches (mm)

	3196 and HT3196						LF3196	
	STX		MTX/LTX		XLTX/X17		STX MTX/LTX	
Service Temperature	inches	mm	inches	mm	inches	mm	inches	mm
-20 to 150°F (-29 to 66°C)	0.005	0.13	0.008	0.20	0.015	0.38	0.015	0.38
Up to 175°F (79°C)	0.005	0.13	0.008	0.20	0.015	0.38	0.015	0.38
Up to 200°F (93°C)	0.005	0.13	0.008	0.20	0.015	0.38	0.015	0.38
Up to 250°F (121°C)	0.006	0.16	0.009	0.23	0.016	0.41	0.016	0.41
Up to 300°F (149°C)	0.007	0.19	0.010	0.26	0.017	0.44	0.017	0.44
Up to 350°F (177°C)	0.009	0.22	0.012	0.29	0.019	0.47	0.019	0.47
Up to 400°F (204°C)	0.010	0.25	0.013	0.32	0.020	0.50	0.020	0.50
Up to 450°F (232°C)	0.011	0.28	0.014	0.35	0.021	0.53	0.021	0.53
Up to 500°F (260°C)	0.012	0.30	0.015	0.38	0.022	0.56	0.022	0.56
Up to 550°F (288°C)	0.013	0.33	0.016	0.41	0.023	0.59	0.023	0.59
Up to 600°F (316°C)	0.014	0.36	0.017	0.44	0.024	0.62	0.024	0.62
Up to 650°F (343°C)	0.016	0.39	0.019	0.47	0.026	0.65	0.026	0.65
Up to 700°F (371°C)	0.017	0.42	0.020	0.50	0.027	0.68	0.027	0.68

Table 3, cont'd
Impeller Clearances

Cold Temperature Clearances for Various Service Temperatures, inches (mm)

	CV 3196[1]		3796		NM 3196				3198	
Service Temperature	STX MTX/LTX	XLTX	STX MTX/LTX		STX		MTX/LTX		STX MTX/LTX	
-20 to 150°F (-29 to 66°C)	0.06	1.52	0.015	0.38	0.005	0.13	0.008	0.20	0.015	0.38
Up to 175°F (79°C)	0.06	1.52	0.015	0.38	0.005	0.13	0.008	0.20	0.020	0.51
Up to 200°F (93°C)	0.06	1.52	0.015	0.38	0.005	0.13	0.008	0.20	0.024	0.61
Up to 250°F (121°C)	0.06	1.52	0.016	0.41					0.032	0.81
Up to 300°F (149°C)	0.06	1.52	0.017	0.44					0.040	1.02
Up to 350°F (177°C)	0.06	1.52	0.019	0.47						
Up to 400°F (204°C)	0.06	1.52	0.020	0.50						
Up to 450°F (232°C)			0.021	0.53						
Up to 500°F (260°C)			0.022	0.56						
Up to 550°F (288°C)										
Up to 600°F (316°C)										
Up to 650°F (343°C)										
Up to 700°F (371°C)										

Out of pump temperature range =

[1] Clearance is set from the back of the impeller to the stuffing box cover / seal chamber / backplate.

5

TROUBLESHOOTING

Problem	Probable Cause	Remedy
No liquid delivered.	Pump not primed.	Reprime pump, check that pump and suction line are full of liquid.
	Suction line clogged.	Remove obstructions.
	Impeller clogged with foreign material.	Back flush pump to clean impeller.
	Wrong direction of rotation.	Change rotation to concur with direction indicated by arrow on bearing housing or pump casing.
	Foot valve or suction pipe opening not submerged enough.	Consult factory for proper depth. Use baffle to eliminate vortices.
	Suction lift too high.	Shorten suction pipe.
No liquid delivered (3796)	Vent line not connected.	Pipe in vent line to expel air.
Pump not producing rated flow or head.	Air leak thru gasket.	Replace gasket.
	Air leak thru stuffing box	Replace or readjust packing/mechanical seal.
	Impeller partly clogged.	Back flush pump to clean impeller.
	Excessive impeller-to-casing clearance.	Adjust impeller clearance.
	Insufficient suction head.	Ensure that suction line shutoff valve is fully open and line is unobstructed.
	Worn or broken impeller.	Inspect and replace if necessary.
Pump starts then stops pumping.	Improperly primed pump.	Reprime pump.
	Air or vapor pockets in suction line.	Rearrange piping to eliminate air pockets.
	Air leak in suction line.	Repair (plug) leak.
Bearings run hot.	Improper alignment.	Realign pump and driver.
	Improper lubrication.	Check lubricant for suitability and level.
	Lube cooling.	Check cooling system.
Pump is noisy or vibrates.	Improper pump/driver alignment.	Align shafts.
	Partly clogged impeller causing imbalance.	Back-flush pump to clean impeller.
	Broken or bent impeller or shaft.	Replace as required.
	Foundation not rigid.	Tighten hold down bolts of pump and motor or adjust stilts.
	Worn bearings.	Replace.
	Suction or discharge piping not anchored or properly supported.	Anchor per Hydraulic Institute Standards Manual recommendations
	Pump is cavitating.	Locate and correct system problem.
Excessive leakage from stuffing box.	Packing gland improperly adjusted.	Tighten gland nuts.
	Stuffing box improperly packed.	Check packing and repack box.
	Worn mechanical seal parts.	Replace worn parts.
	Overheating mechanical seal.	Check lubrication and cooling lines.
	Shaft sleeve scored.	Remachine or replace as required.
Motor requires excessive power.	Head lower than rating. Pumps too much liquid.	Consult factory. Install throttle valve, trim impeller diameter.
	Liquid heavier than expected.	Check specific gravity and viscosity.
	Stuffing box packing too tight.	Readjust packing. Replace if worn.
	Rotating parts bind.	Check internal wearing parts for proper clearances.